University of Science and Technology of Southern Philippines

Technology Promotions and Commercialization Office

PATENT DRAWING PREPARATION

Engr. Mark Lister V. Nalupa
ITSO Technical Expert
marklister.nalupa@ustp.edu.ph

P UM TM © ID

LEARNING OBJECTIVES

- ✓ Prepare a patent drawing.
- ✓ Write brief descriptions of the drawings.

PURPOSE OF PATENT DRAWING

- ✓ Enhance Understanding
- ✓ Support Claims
- ✓ Enable Evaluation
- ✓ Patent Application Completeness
- ✓ Reference for Future
- ✓ Enforcement and Litigation
- ✓ Expedite Examination

GENERAL REQUISITE FOR A PATENT DRAWING

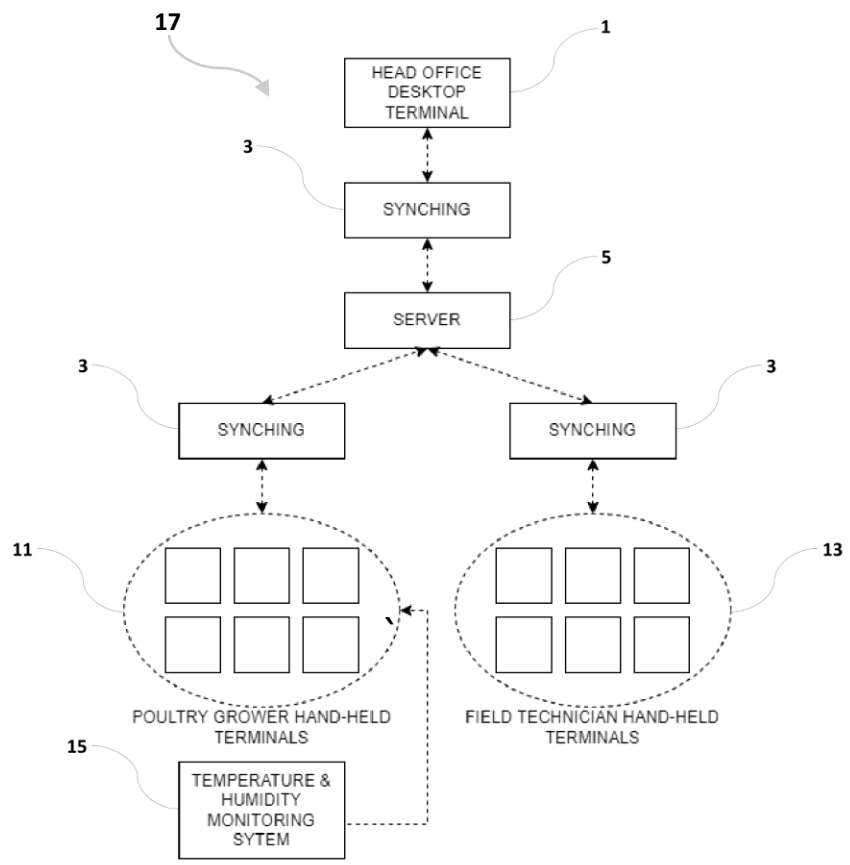

FIG. 1

University of Science and Technology of Southern Philippines
Applicant
By:
Gladdy Christie H. Compasan
ITSO Manager - USTP

1/5

A4 Size

GENERAL REQUISITE FOR A PATENT DRAWING

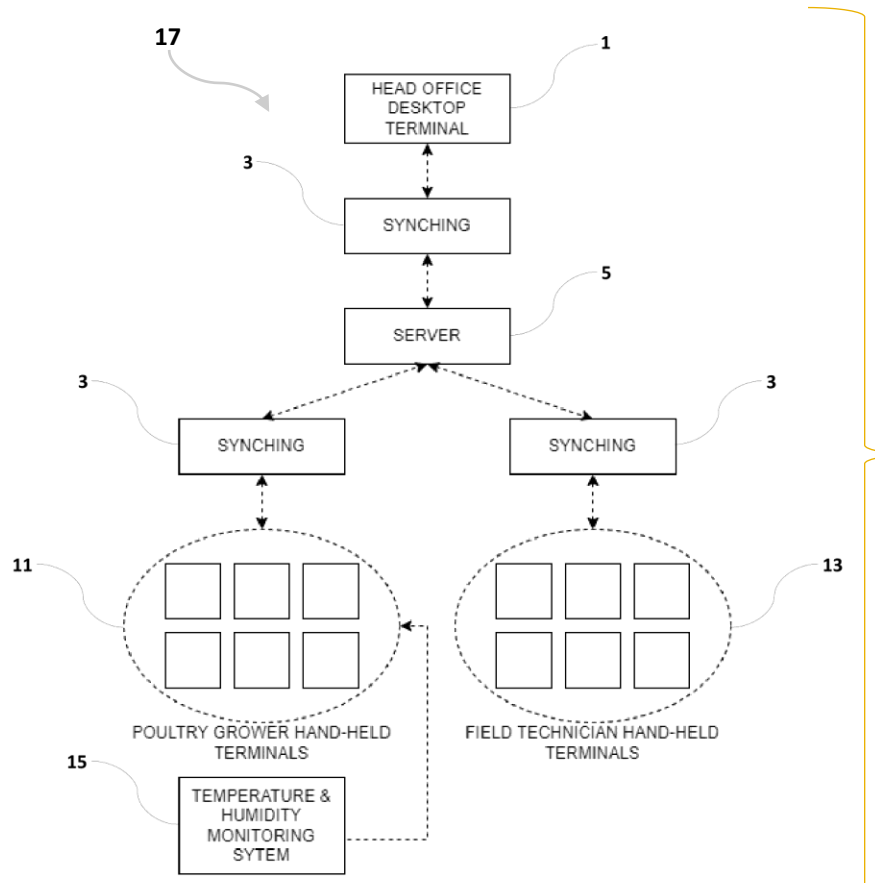

FIG. 1

University of Science and Technology of Southern Philippines
Applicant
By:
Gladdy Christie H. Compasan
ITSO Manager - USTP

1/5

Upright Position

* All views on the same sheet must stand in the same direction

GENERAL REQUISITE FOR A PATENT DRAWING

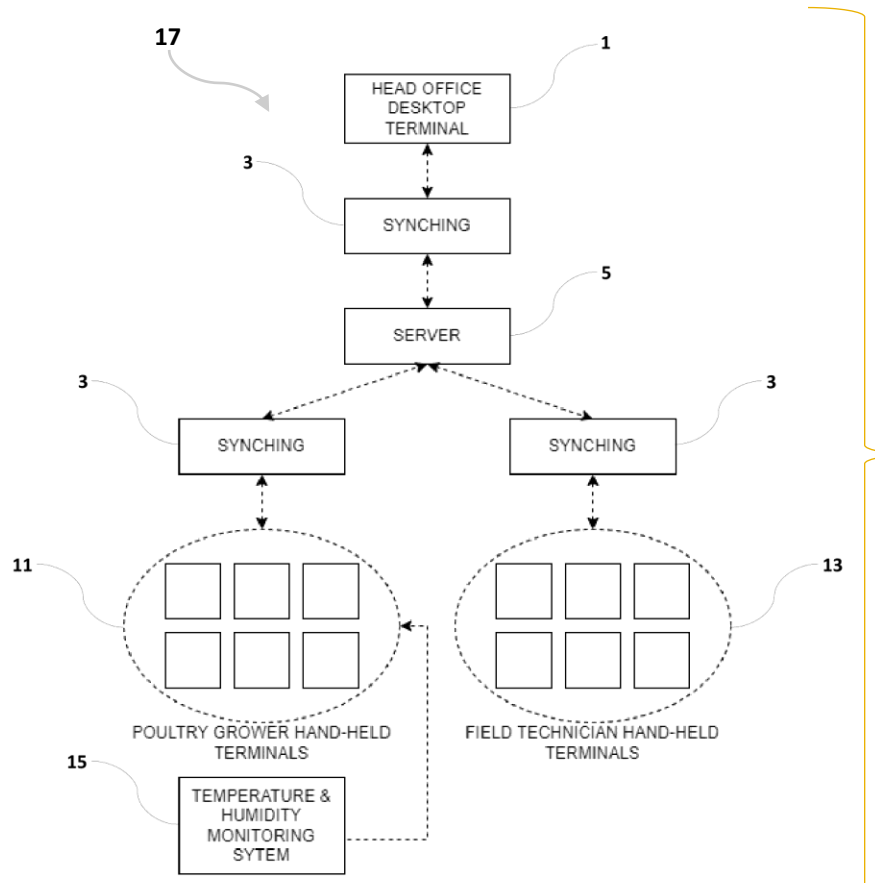

FIG. 1

University of Science and Technology of Southern Philippines
Applicant
By:
Gladdy Christie H. Compasan
ITSO Manager - USTP

1/5

India Ink

GENERAL REQUISITE FOR A PATENT DRAWING

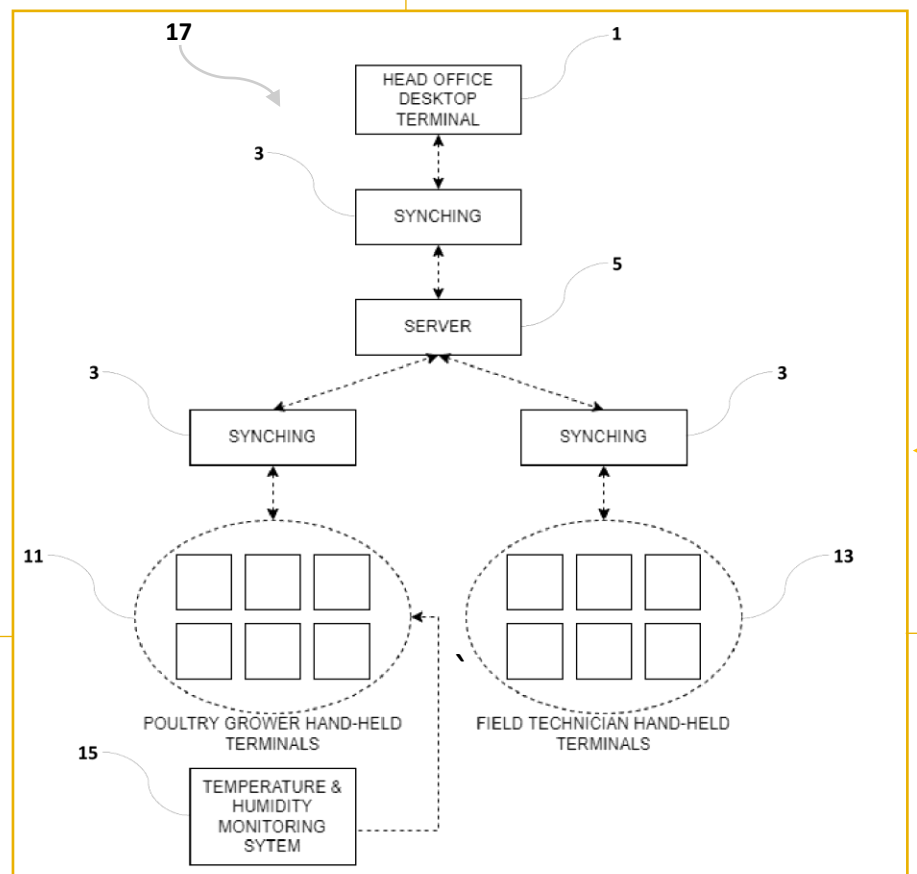

FIG. 1

University of Science and Technology of Southern Philippines
Applicant
By:
Gladdy Christie H. Compasan
ITSO Manager - USTP

1/5

Margins

top: 2.5 cm
left: 2.50 cm
right: 1.50 cm
bottom: 1.0 cm

GENERAL REQUISITE FOR A PATENT DRAWING

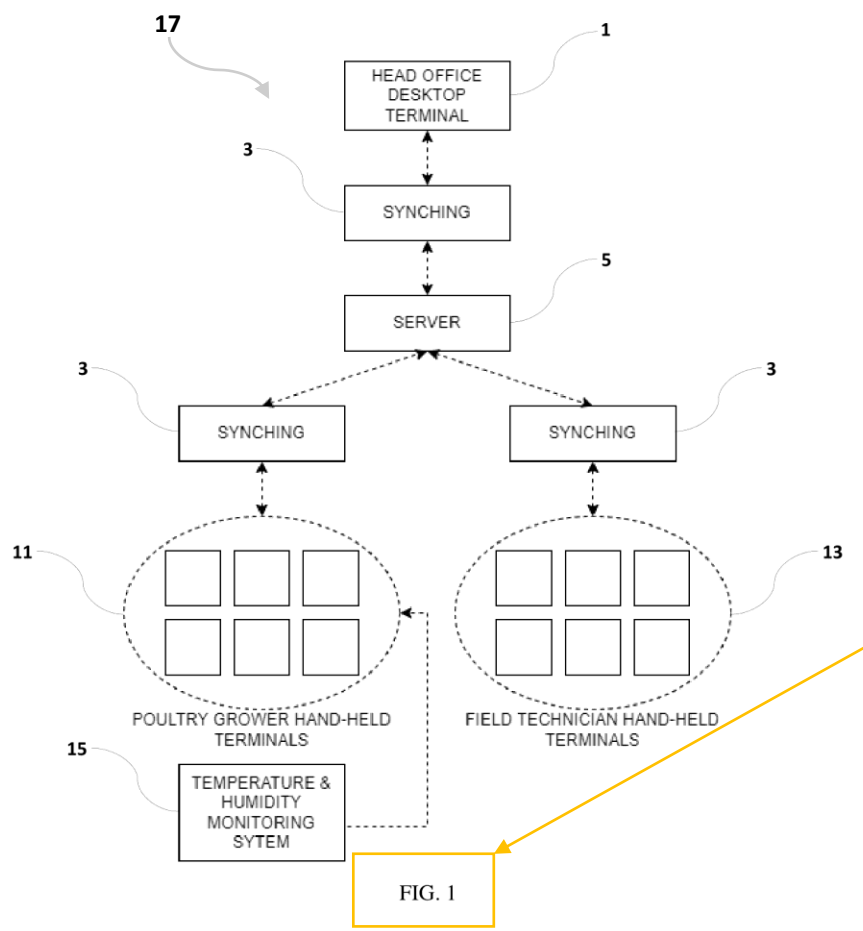

FIG. 1

University of Science and Technology of Southern Philippines
Applicant
By:
Gladdy Christie H. Compasan
ITSO Manager - USTP

1/5

Drawing Label

* sequential numbering
* **center-bottom** or center-top

GENERAL REQUISITE FOR A PATENT DRAWING

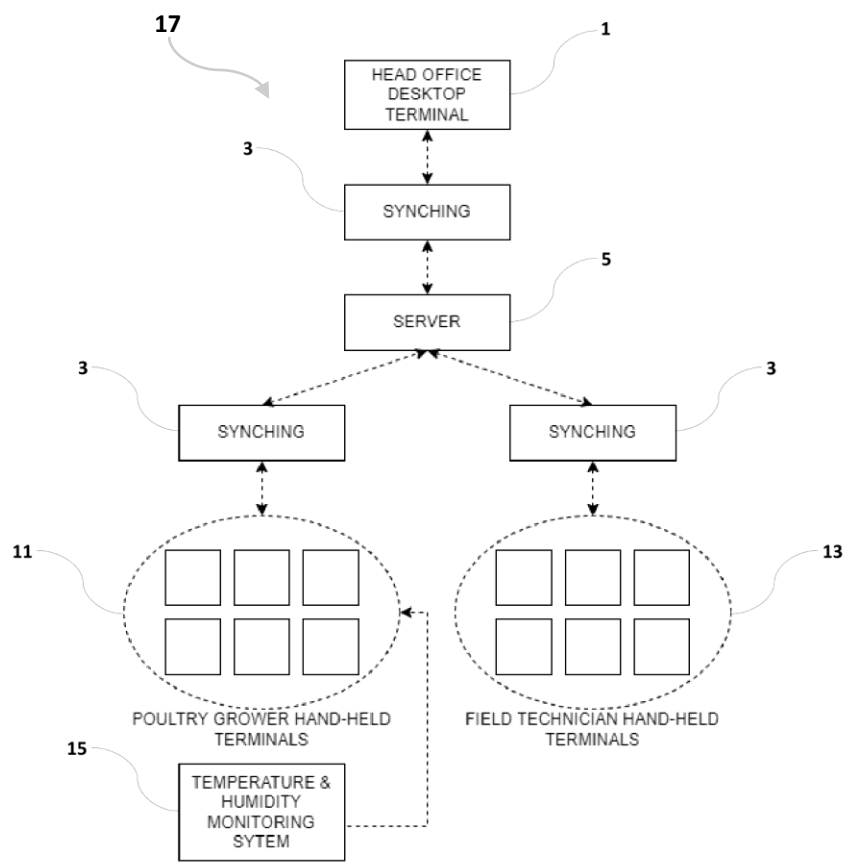

FIG. 1

University of Science and Technology of Southern Philippines
Applicant
By:
Gladdy Christie H. Compasan
ITSO Manager - USTP

1/5

Signature of the Applicant

* lower right-hand corner within the imaginary marginal lines
* every page

GENERAL REQUISITE FOR A PATENT DRAWING

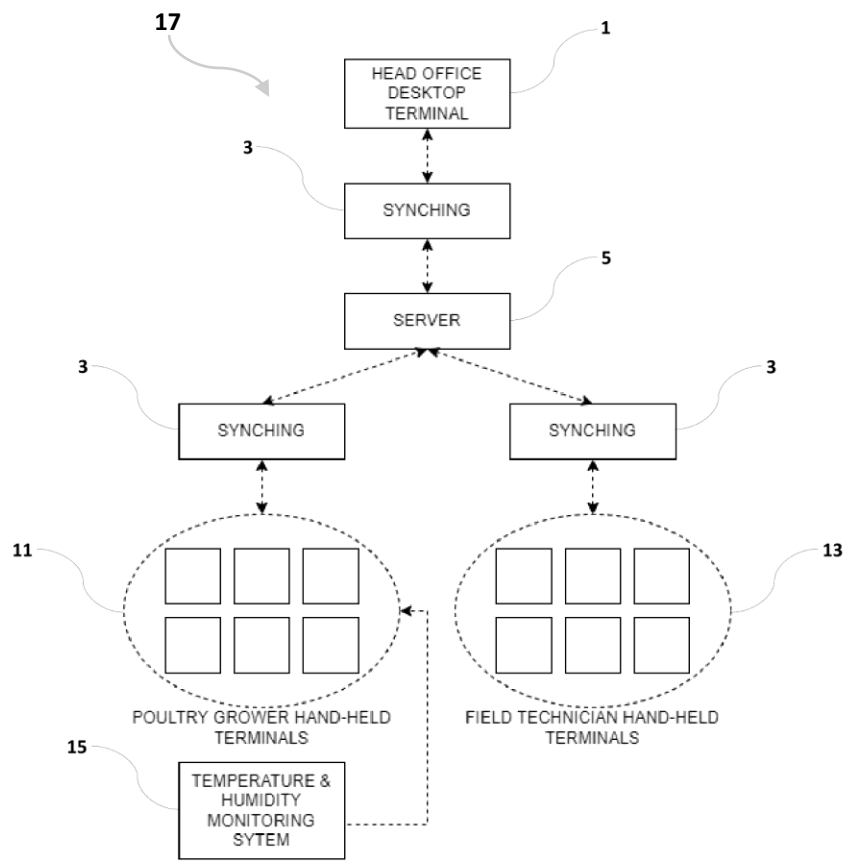

FIG. 1

University of Science and Technology of Southern Philippines
Applicant
By:
Gladdy Christie H. Compasan
ITSO Manager - USTP

1/5

Page Number

* independent number from abstract, description, and claims
* Arabic numerals separated by a "/" (e.g. 1/5)

GENERAL REQUISITE FOR A PATENT DRAWING

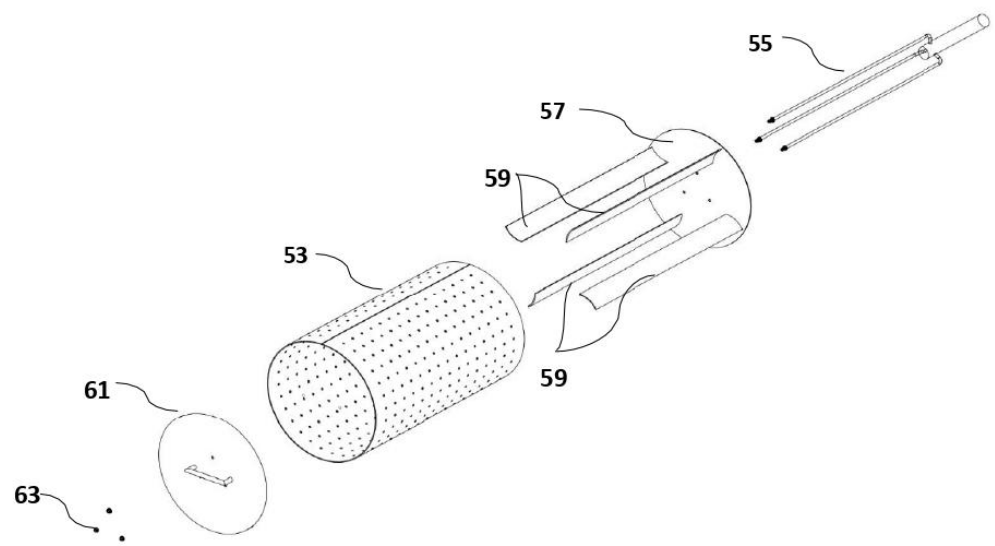

FIG. 4.

University of Science and Technology of Southern Philippines
Applicant
By:
Gladdy Christie H. Compasan
ITSO Manager - USTP

4/5

Drawing
(Landscape Orientation)

GENERAL REQUISITE FOR A PATENT DRAWING

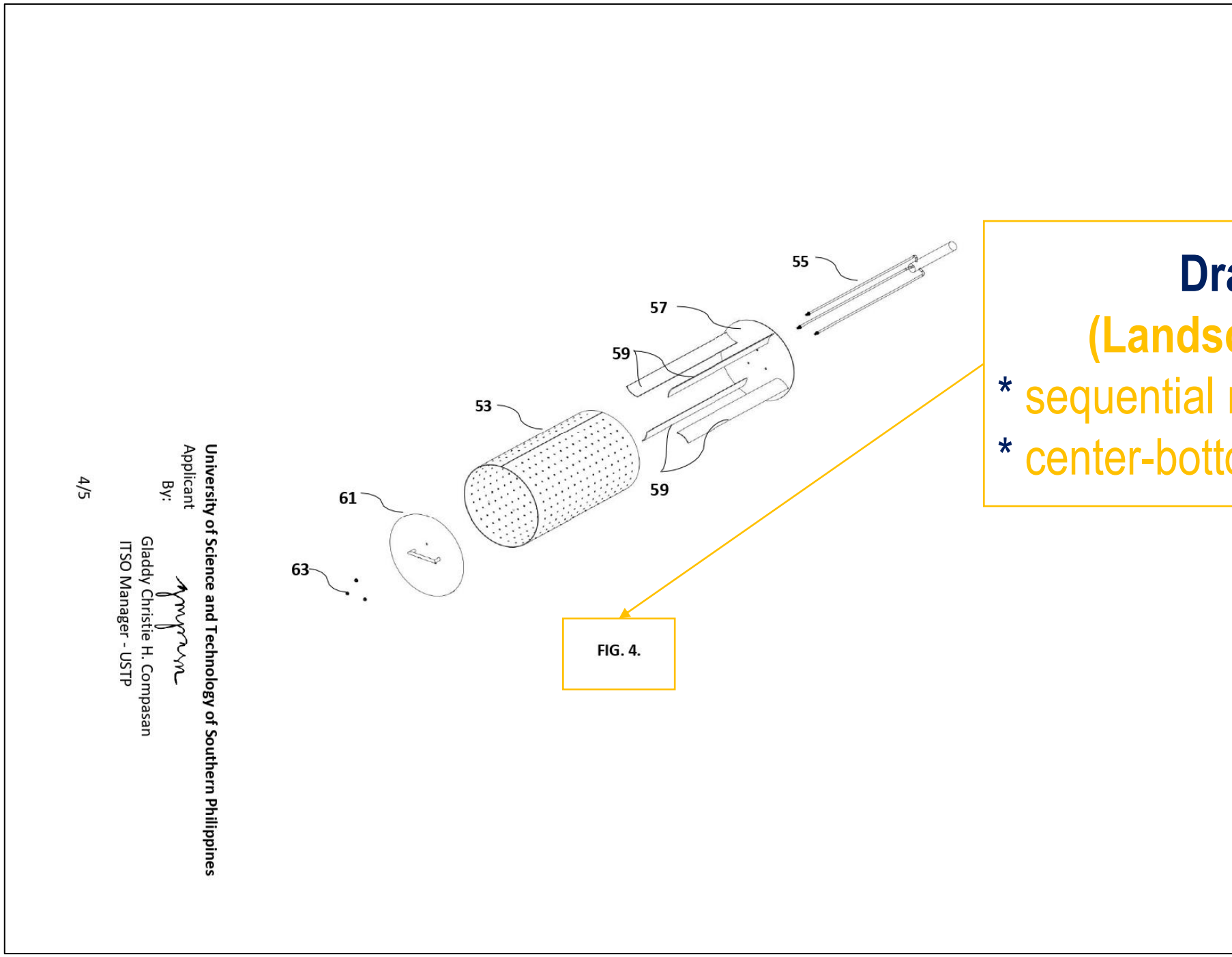

Drawing Label

(Landscape Orientation)

* sequential numbering
* center-bottom or center-top

GENERAL REQUISITE FOR A PATENT DRAWING

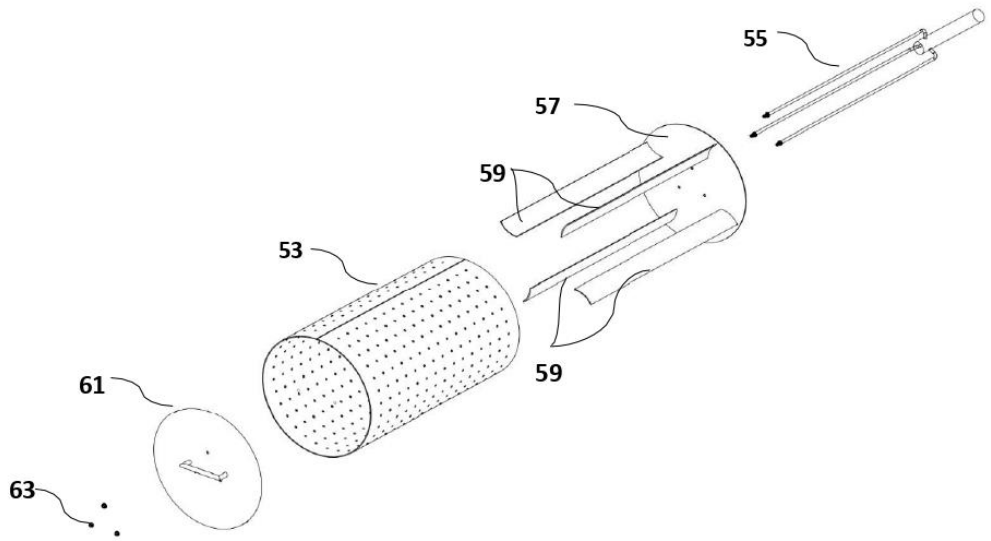

FIG. 4.

University of Science and Technology of Southern Philippines
Applicant
By:
Gladdy Christie H. Compasan
ITSO Manager - USTP

4/5

Signature of the Applicant
(Landscape Orientation)

GENERAL REQUISITE FOR A PATENT DRAWING

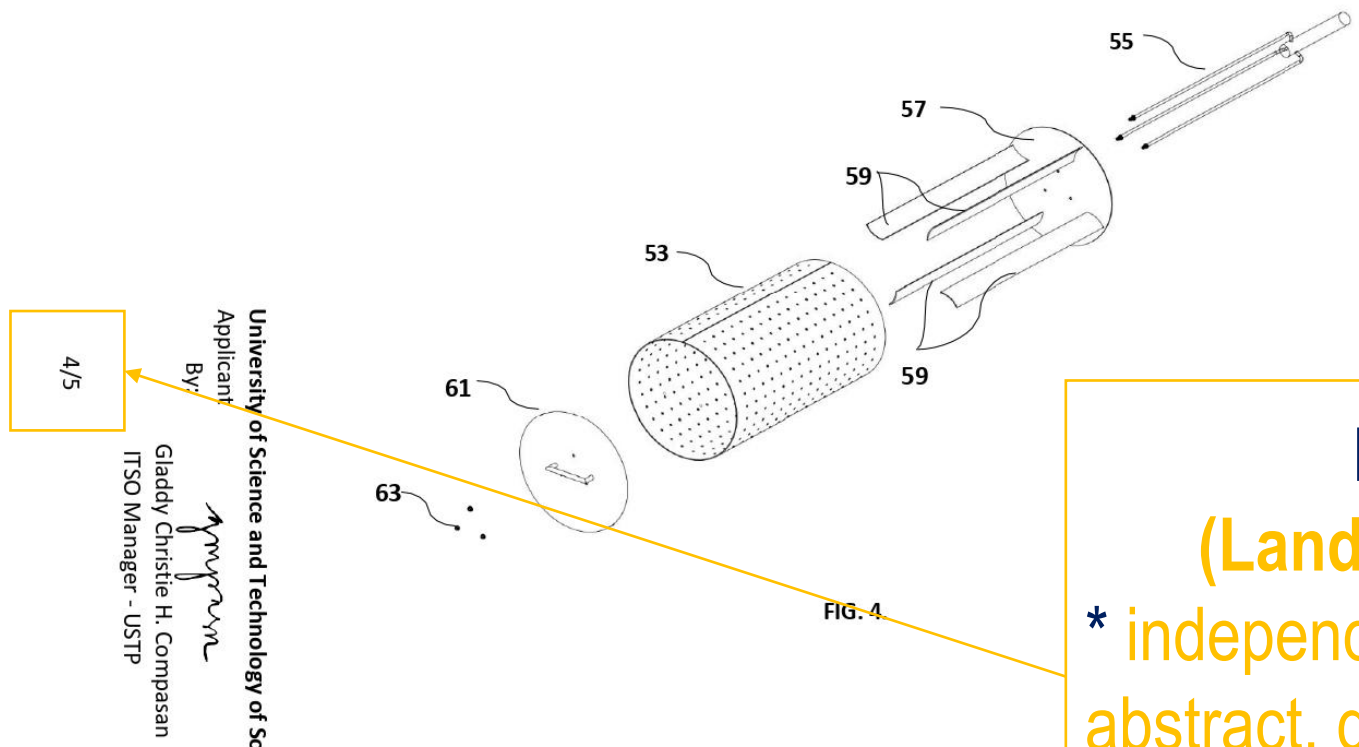

Page Number

(Landscape Orientation)

* independent number from abstract, description, and claims
* Arabic numerals separated by a "/" (e.g. 1/5)

GENERAL REQUISITE FOR A PATENT DRAWING

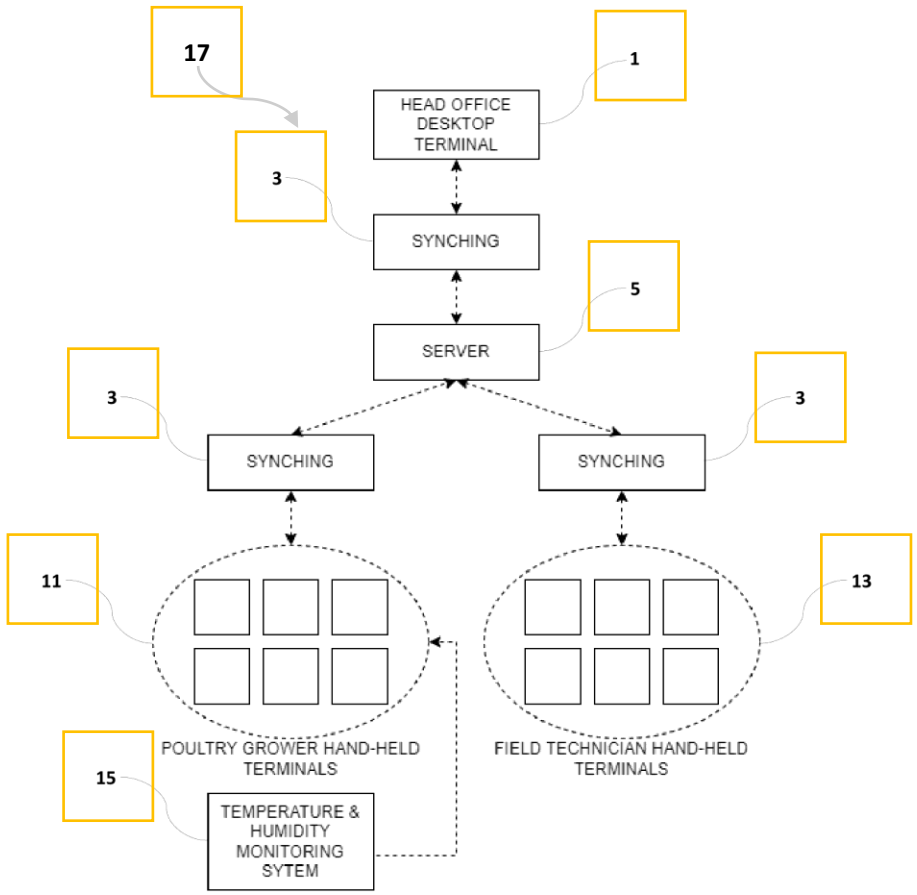

FIG. 1

University of Science and Technology of Southern Philippines
Applicant
By:
Gladdy Christie H. Compasan
ITSO Manager - USTP

1/5

Reference Numeral

* ≈3.2 mm. in height (9 pt – font size)

* placed at a distance where there is available space

* one reference numeral per part

* suggested to use *"skip counting"*

* reference numeral not mentioned in the Description should not appear in the Drawings

* letters can also be used

GENERAL REQUISITE FOR A PATENT DRAWING

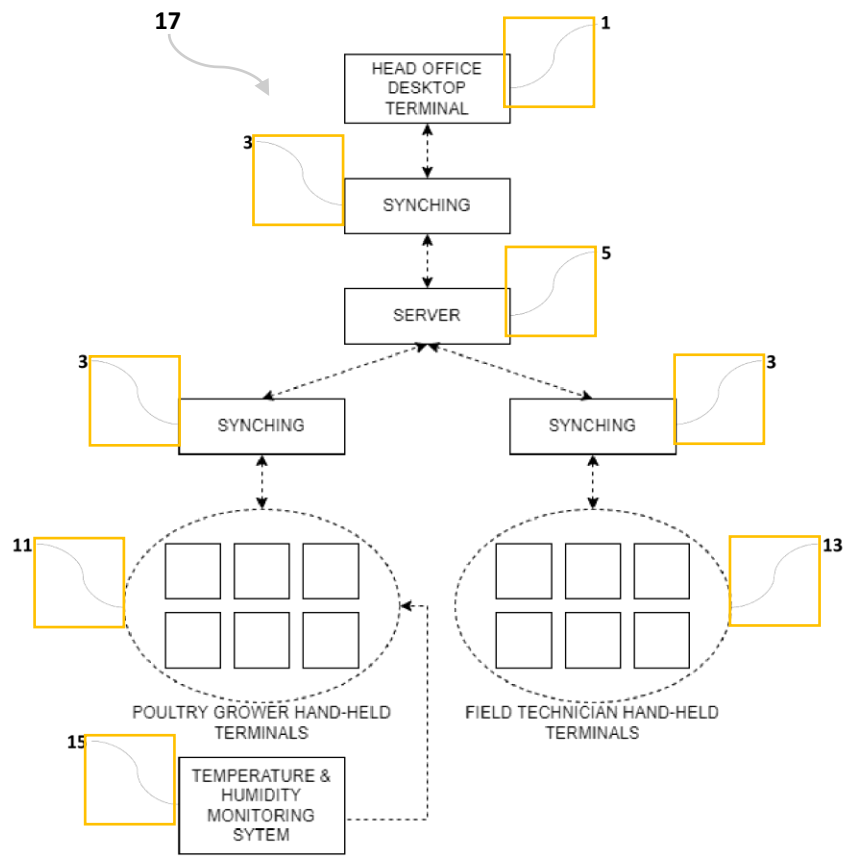

FIG. 1

University of Science and Technology of Southern Philippines
Applicant
By:
Gladdy Christie H. Compasan
ITSO Manager - USTP

1/5

Lead Line without Arrow

* connected to individual part
* line without an arrow

GENERAL REQUISITE FOR A PATENT DRAWING

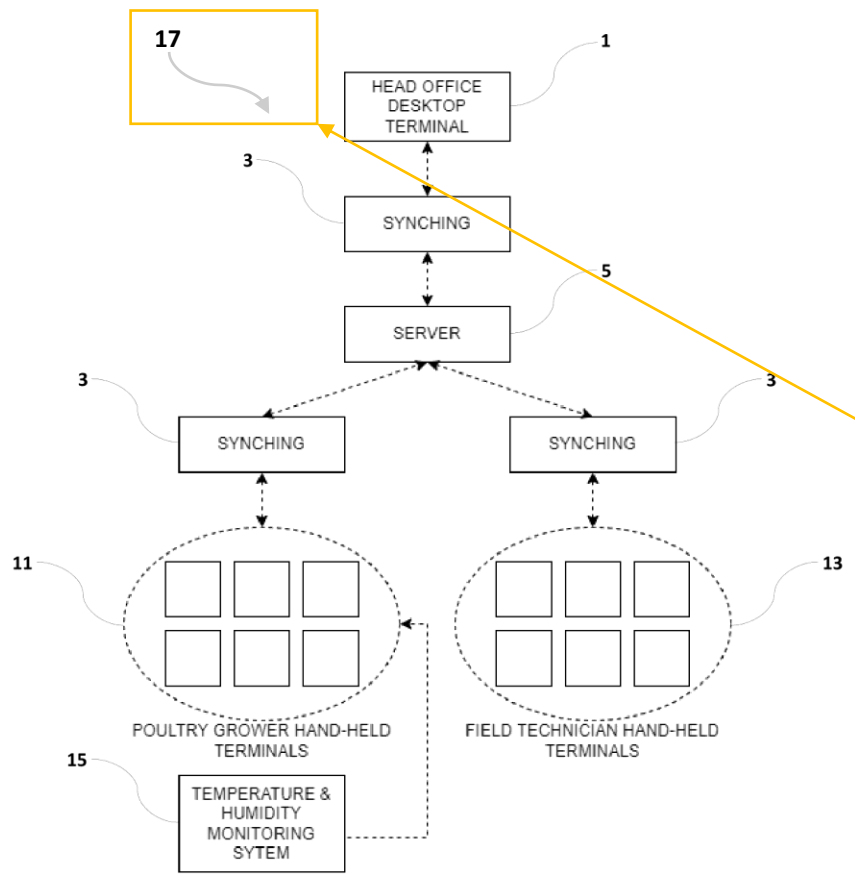

FIG. 1

University of Science and Technology of Southern Philippines
Applicant
By:
Gladdy Christie H. Compasan
ITSO Manager - USTP

1/5

Lead Line with Arrow

* use when referring to entire unit

GENERAL REQUISITE FOR A PATENT DRAWING

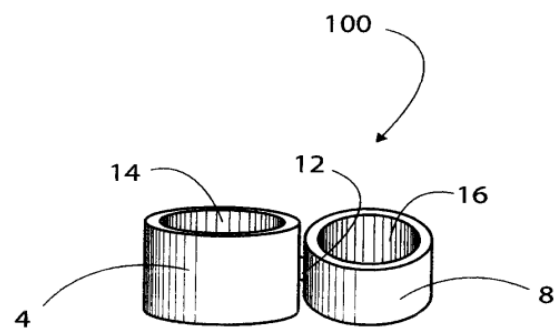

Fig. 1

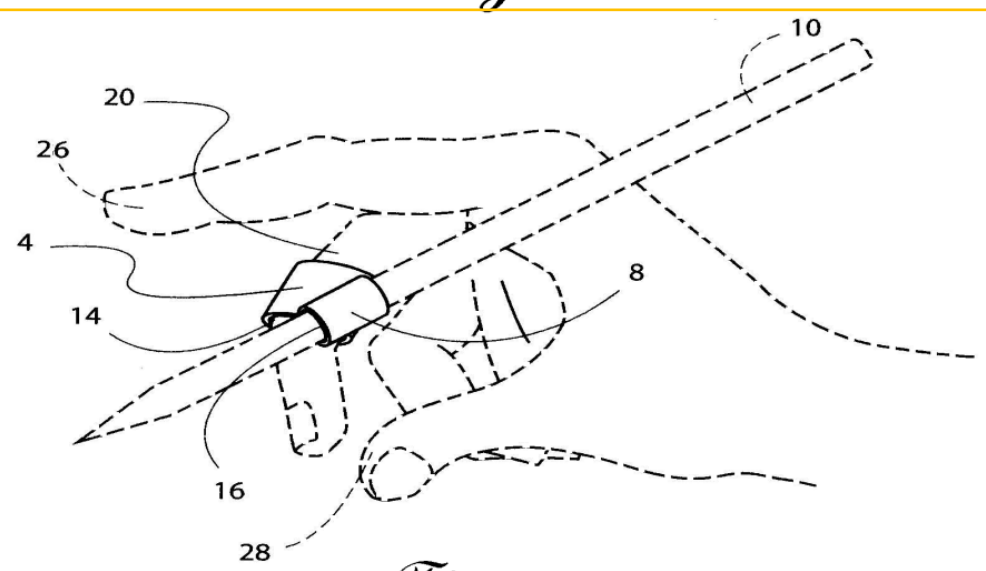

Fig. 2

ARMANDO R. REOSURA
MAKER

Broken Lines

* use when referring to a part *not included* in the invention

GENERAL REQUISITE FOR A PATENT DRAWING

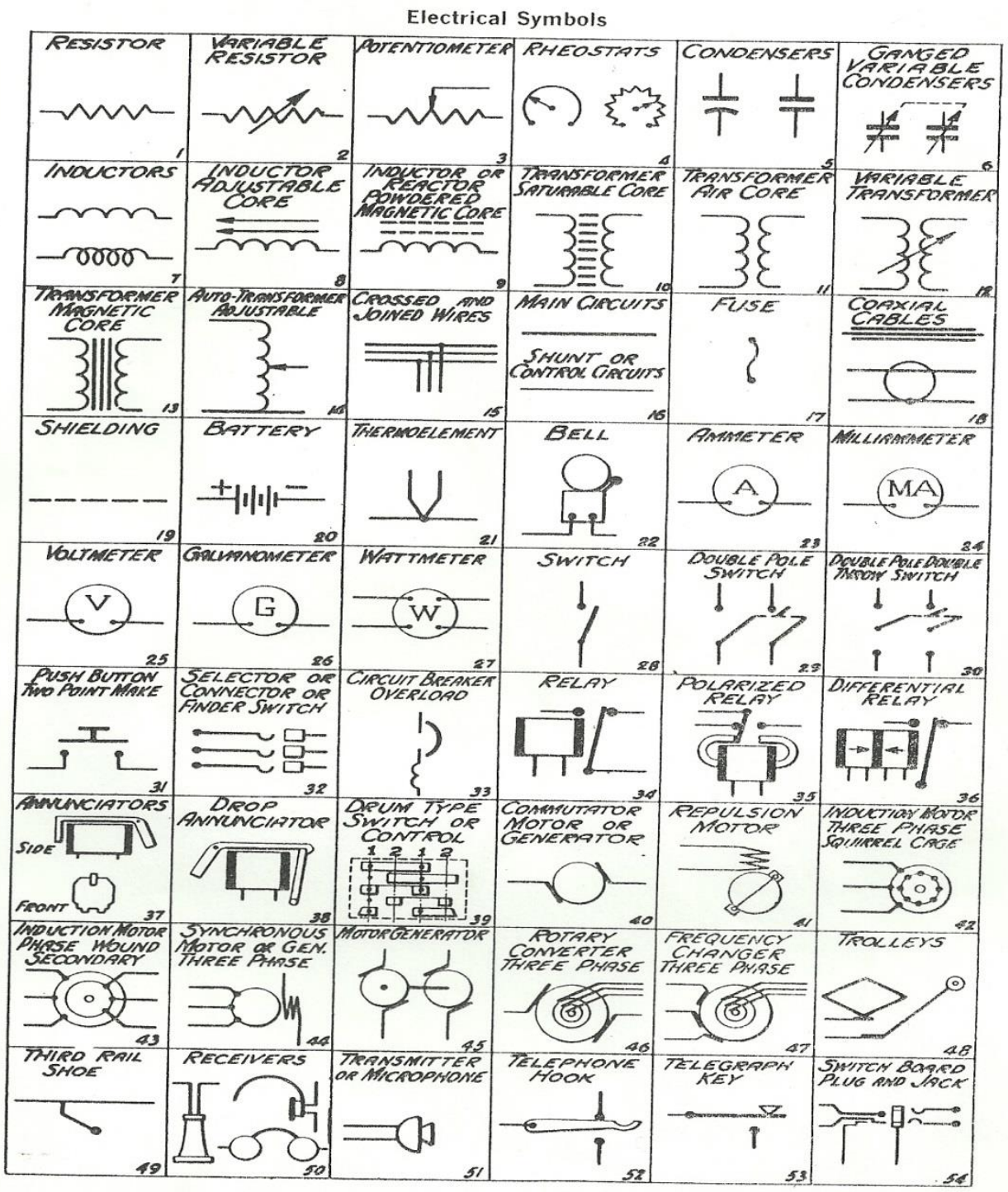

* Use Obvious Symbols

GENERAL REQUISITE FOR A PATENT DRAWING

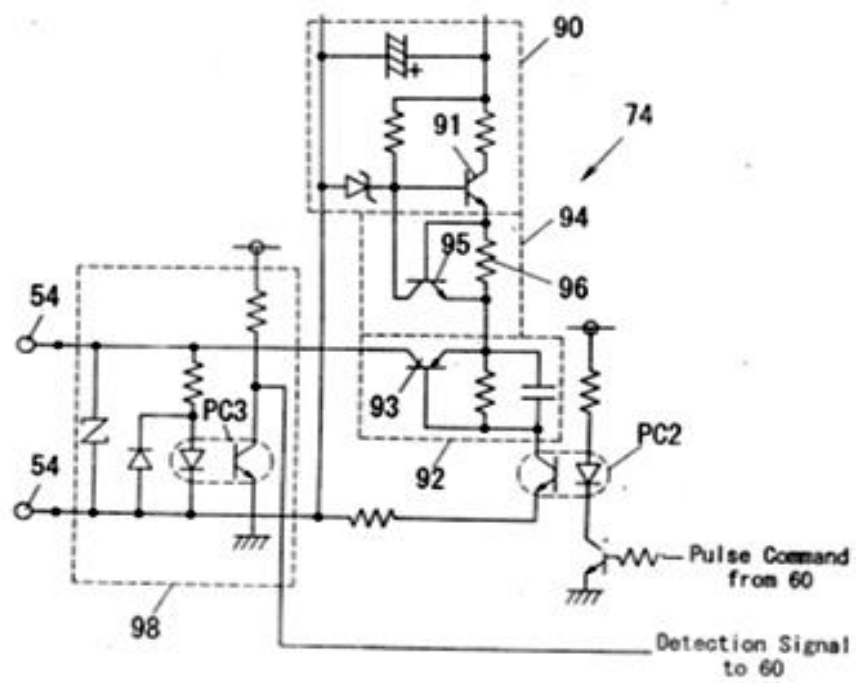

FIG. 15

Yuichi YOSHIMURA
Toshiaki TOKIZANE
Kouji YOKOTA
Inventors

By:

MILA FEDERIS
Federis & Associates

* Use Obvious Symbols

GENERAL REQUISITE FOR A PATENT DRAWING

- Freehand Work should be Avoided
- Scale of the Drawing should be Large Enough But should Not be Crowded
- Surface Shading- Heavy Lines on the Shaded side be Used. The light should come from the upper left hand corner of an angle of 45°

GENERAL REQUISITE FOR A PATENT DRAWING

Drawings to be considered:

- ✓ **Flow Sheets**
- ✓ **Diagrams**
- ✓ **Chemical Structure**

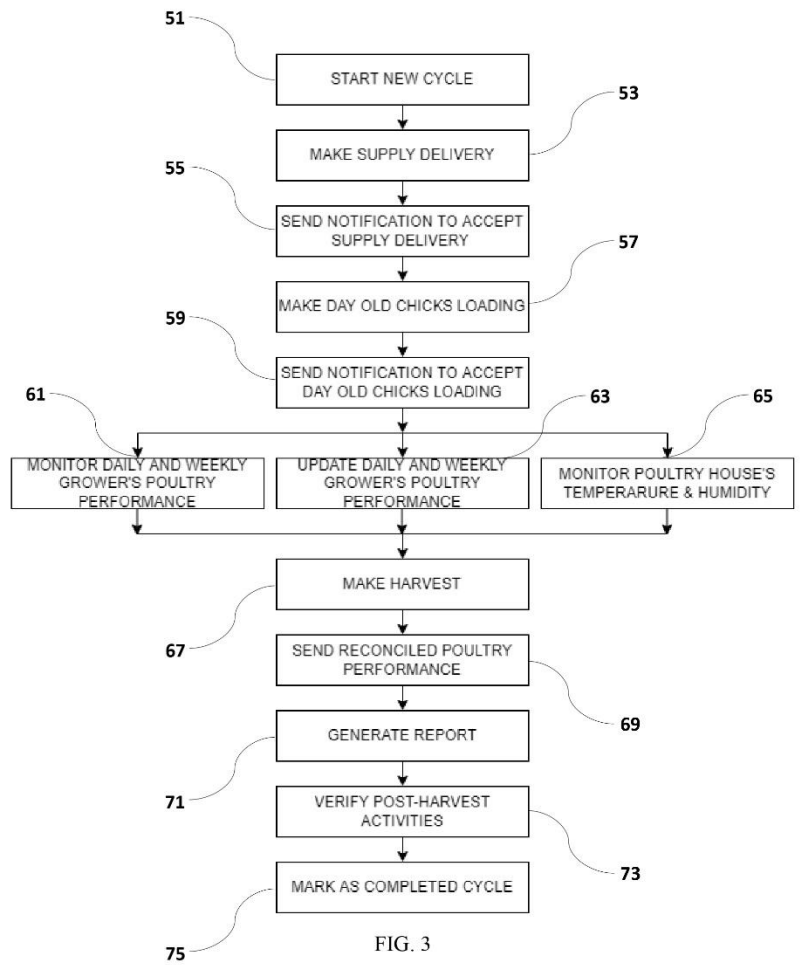

FIG. 3

University of Science and Technology of Southern Philippines
Applicant

By:
Gladdy Christie H. Compasan
ITSO Manager - USTP

3/5

GENERAL REQUISITE FOR A PATENT DRAWING

Figure 1 is a side view of an embodiment.

Figure 2 is the microscopic depiction on how the invention works.

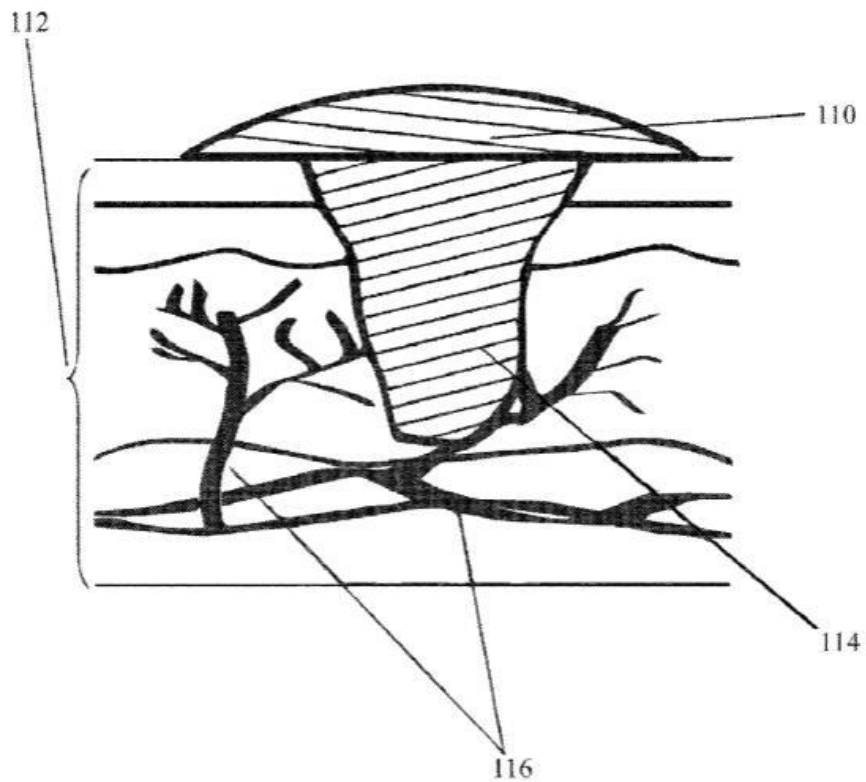

FIG. 1

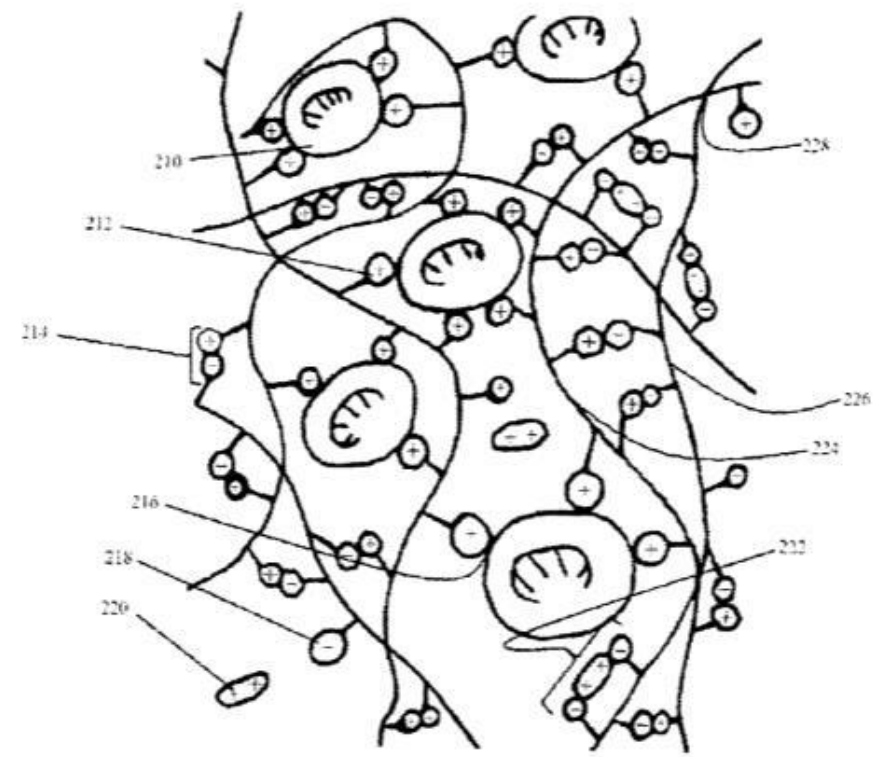

FIG. 2

GENERAL REQUISITE FOR A PATENT DRAWING

Photographs

- Not Normally Considered to be Proper Drawings

- Only Acceptable for Obtaining a Filing Date

- Can Only be Accepted within Special Categories:
    a. Crystalline Structures
    b. Metallurgical Microstructures
    c. Textile Fabrics
    d. Grain Structures
    e. Ornamental Effects

ORGANIZE YOUR DRAWING

- Arrange the Drawings in a Natural Progression. Use the "Story-Telling" Sequence.
- 1st Figure- Simple Plan or Perspective View.
- Subsequent Drawings Should Show How It Works in a Natural Progression.
- Show Variations-May Include Design-Arounds.
- Drawings coming from a Prior Art should indicate the words "PRIOR ART"

EXAMPLE OF ORGANIZE DRAWINGS (1)

RICE DISPENSER

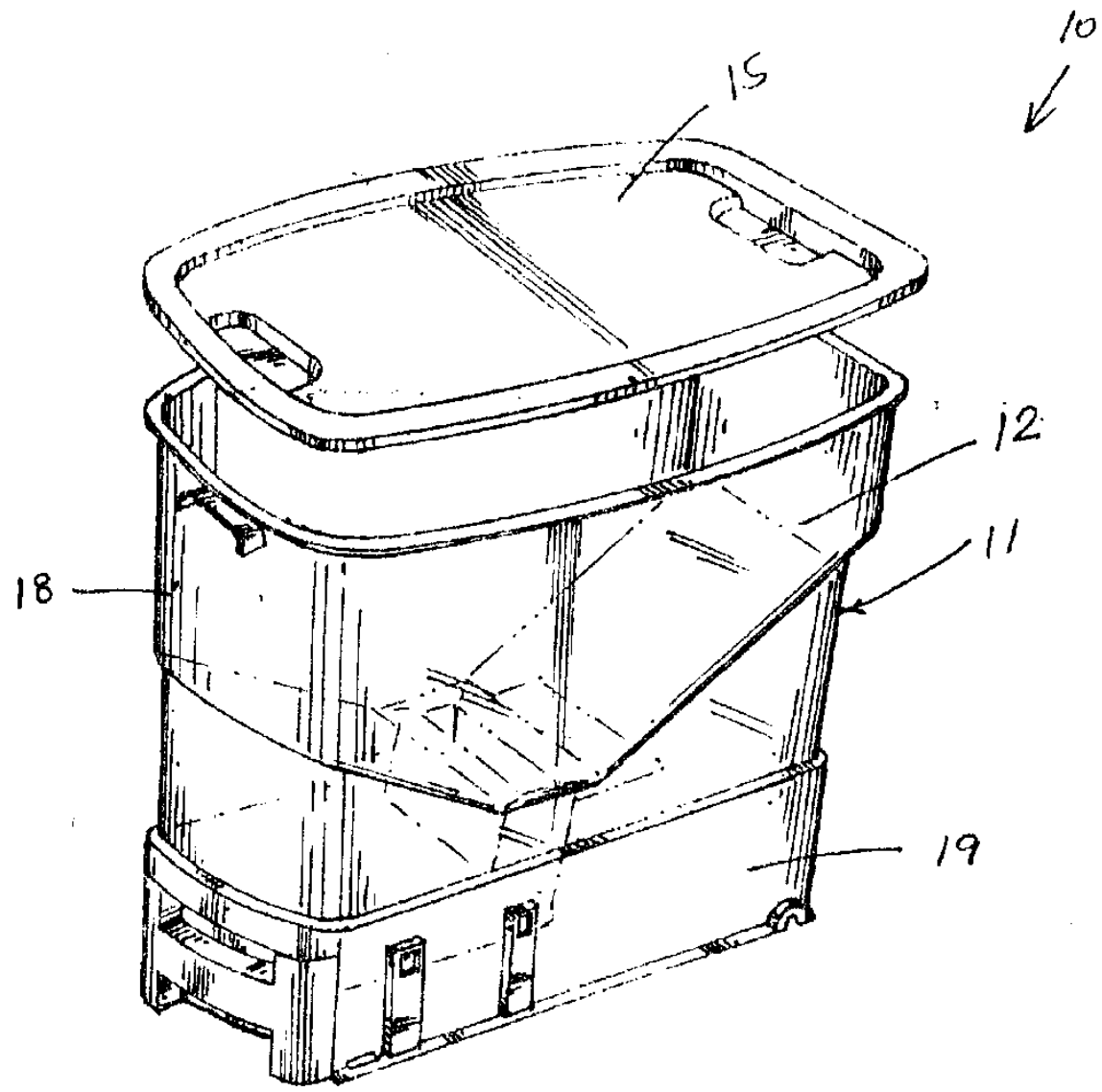

Fig. 1

EXAMPLE OF ORGANIZE DRAWINGS (1)

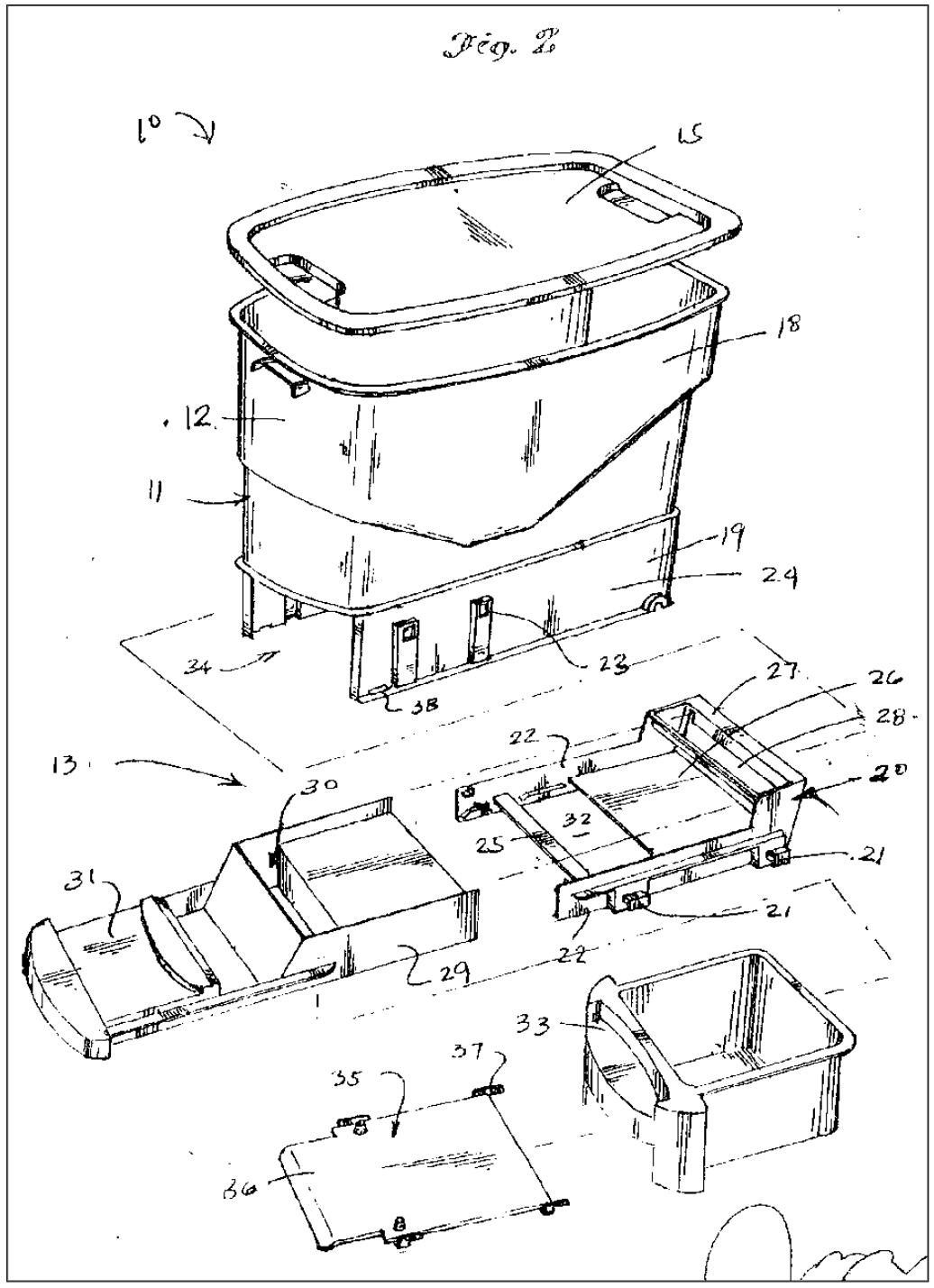

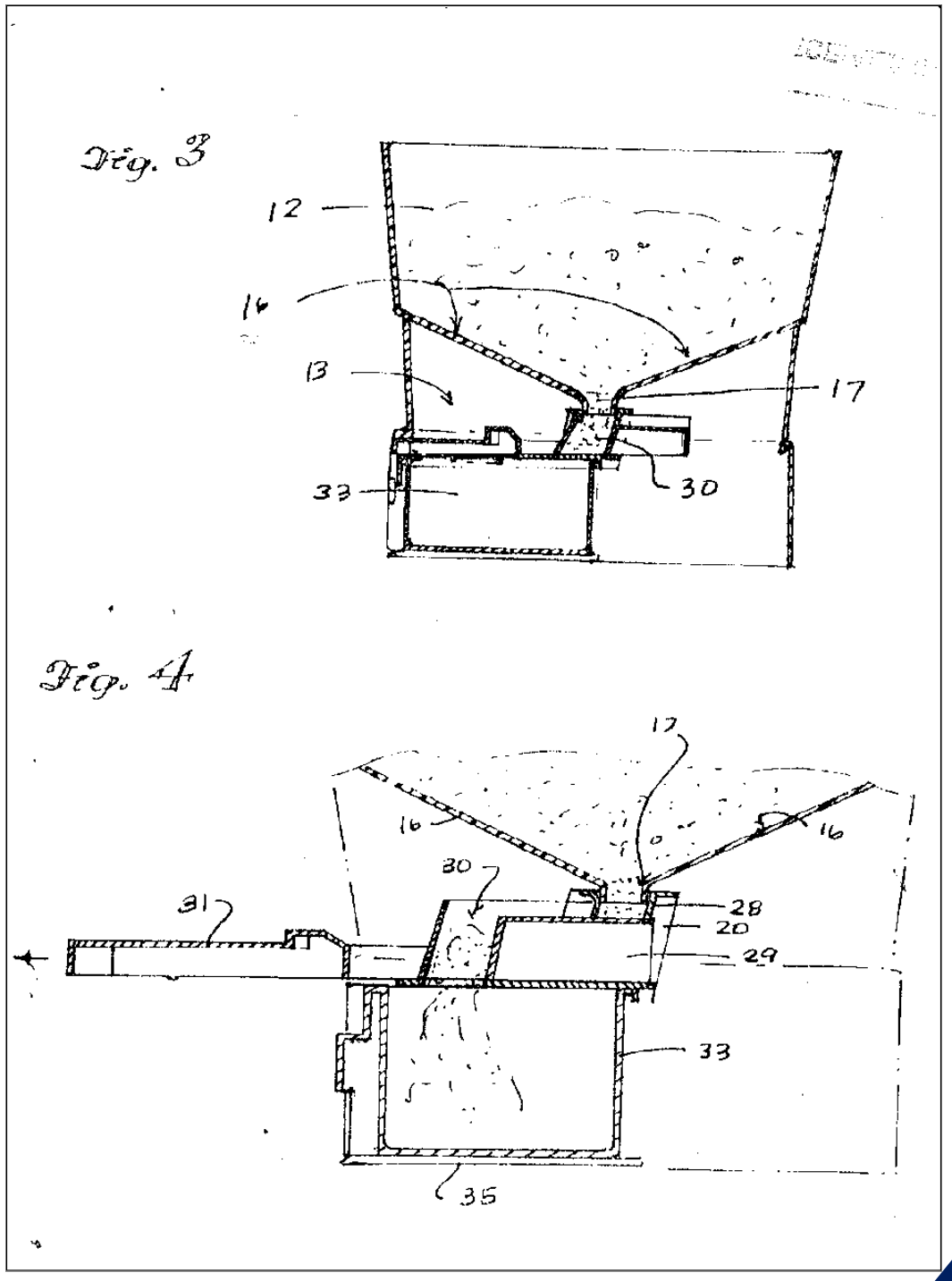

EXAMPLE OF ORGANIZE DRAWINGS (2)

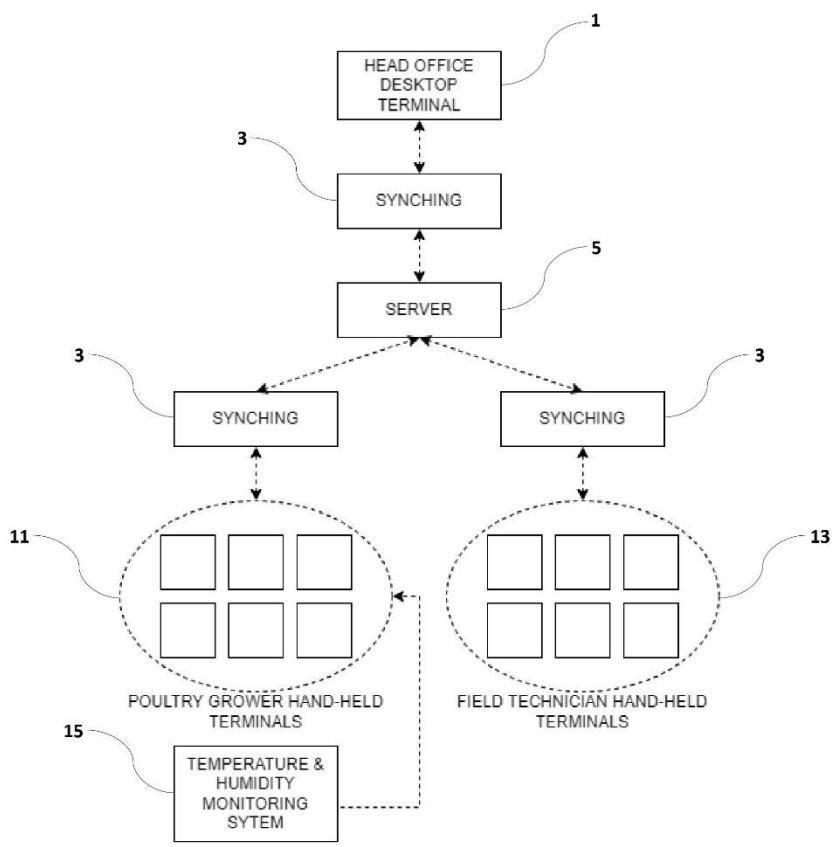

FIG. 1

University of Science and Technology of Southern Philippines
Applicant
By:
Gladdy Christie H. Compasan
ITSO Manager - USTP

1/5

CLOUD-BASED POULTRY MONITORING SYSTEM AND METHODS

EXAMPLE OF ORGANIZE DRAWINGS (2)

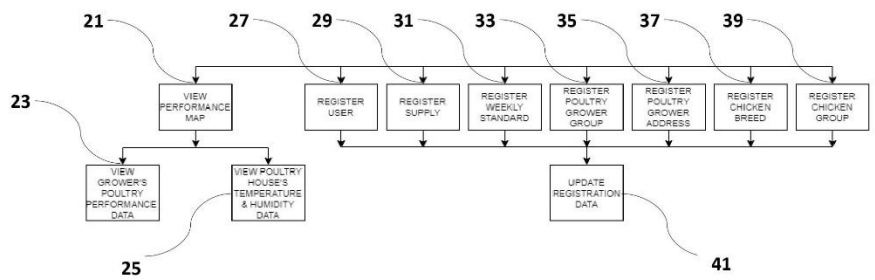

FIG. 2

University of Science and Technology of Southern Philippines
Applicant
By:
Gladdy Christie H. Compasan
ITSO Manager - USTP

2/5

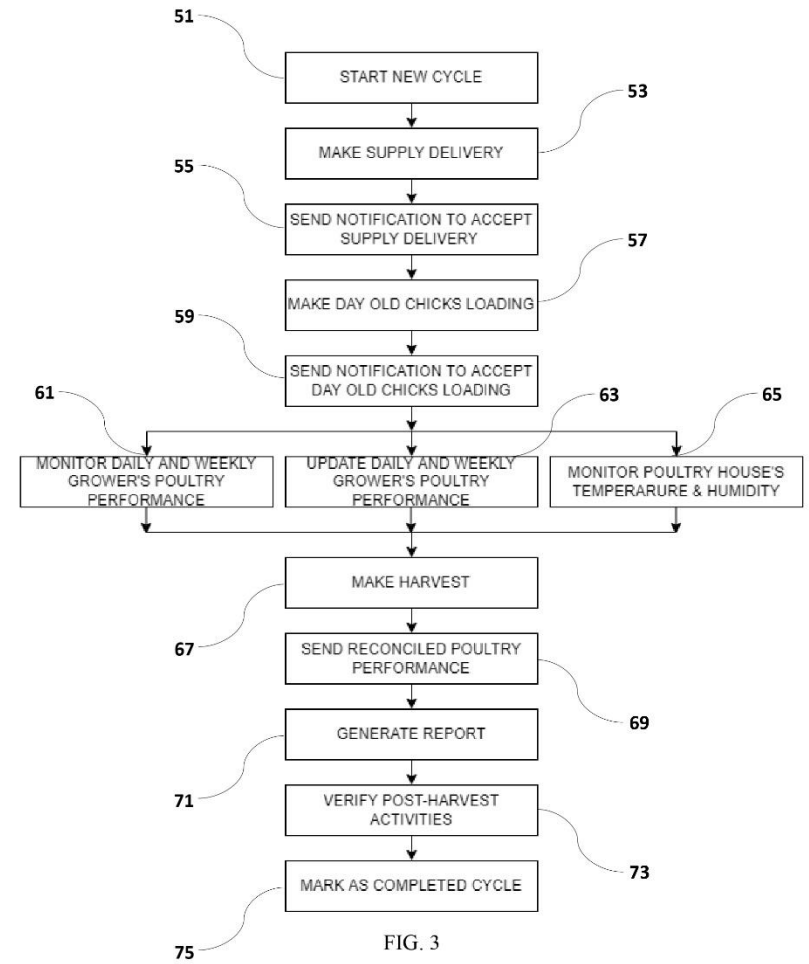

FIG. 3

University of Science and Technology of Southern Philippines
Applicant
By:
Gladdy Christie H. Compasan
ITSO Manager - USTP

3/5

EXAMPLE OF ORGANIZE DRAWINGS (2)

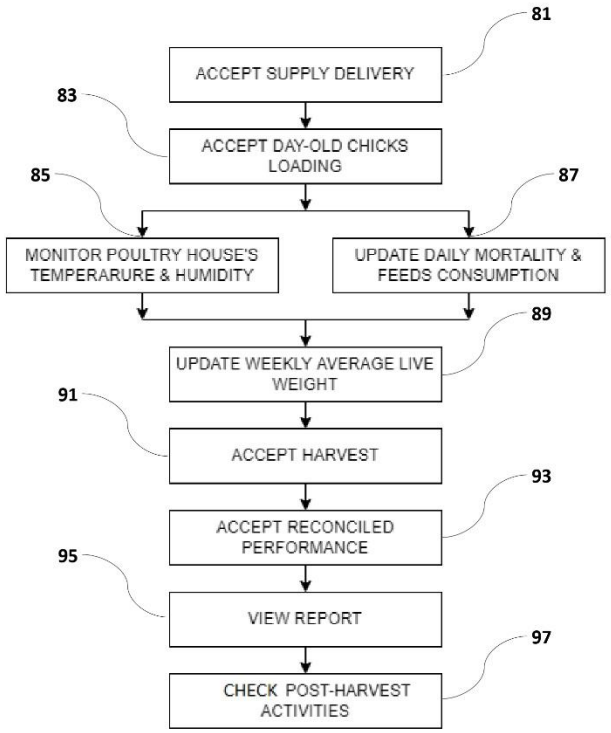

FIG. 4

University of Science and Technology of Southern Philippines
Applicant
By:
Gladdy Christie H. Compasan
ITSO Manager - USTP

4/5

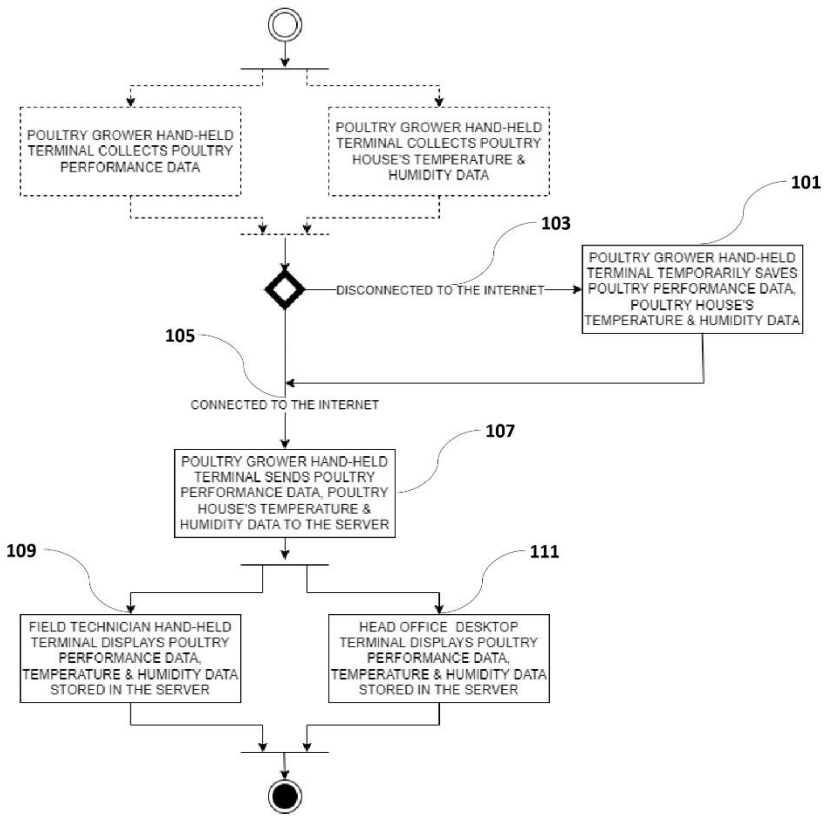

FIG. 5

University of Science and Technology of Southern Philippines
Applicant
By:
Gladdy Christie H. Compasan
ITSO Manager - USTP

5/5

KIND OF MATERIAL WITH SECTIONAL VIEW

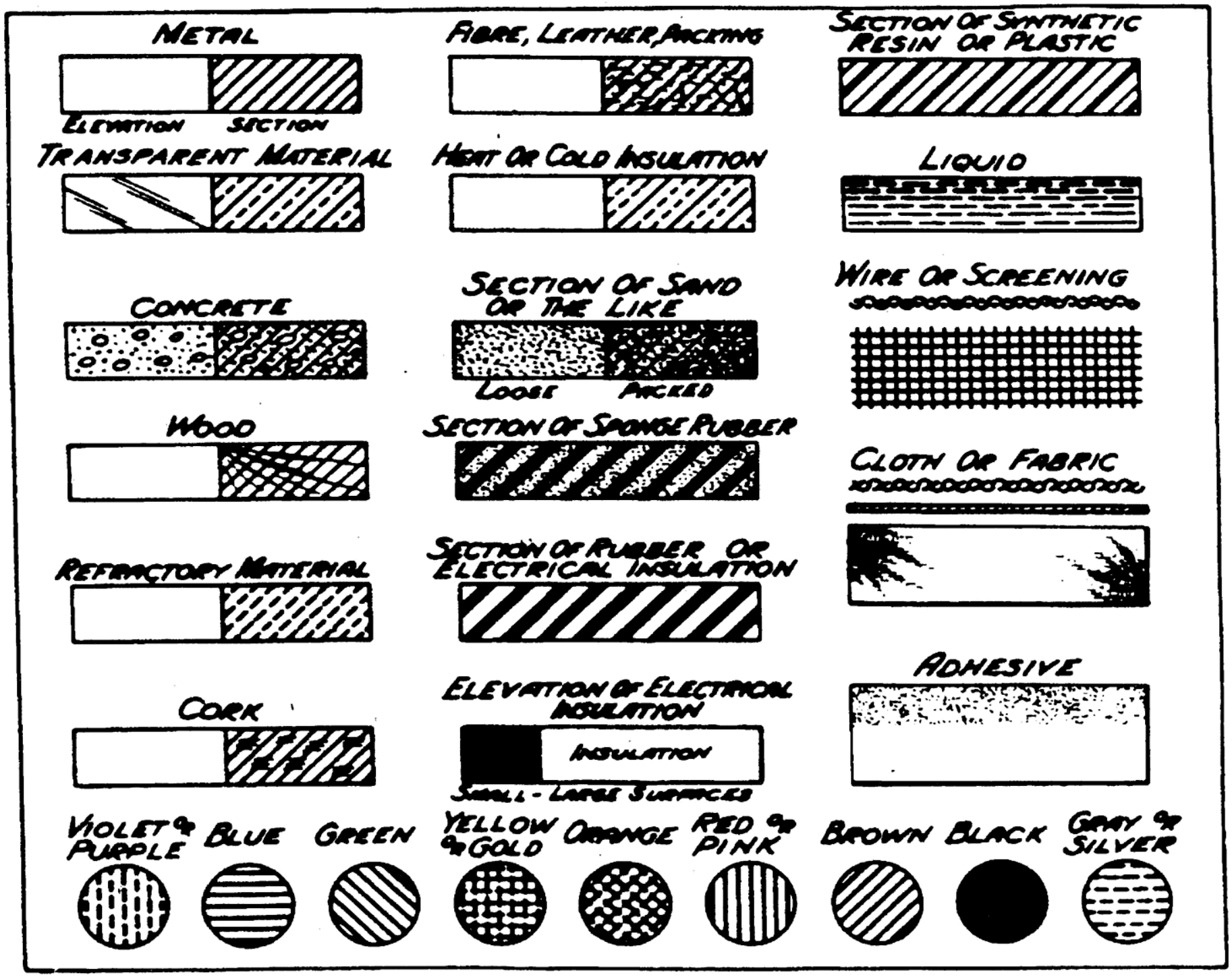

EXERCISE 1

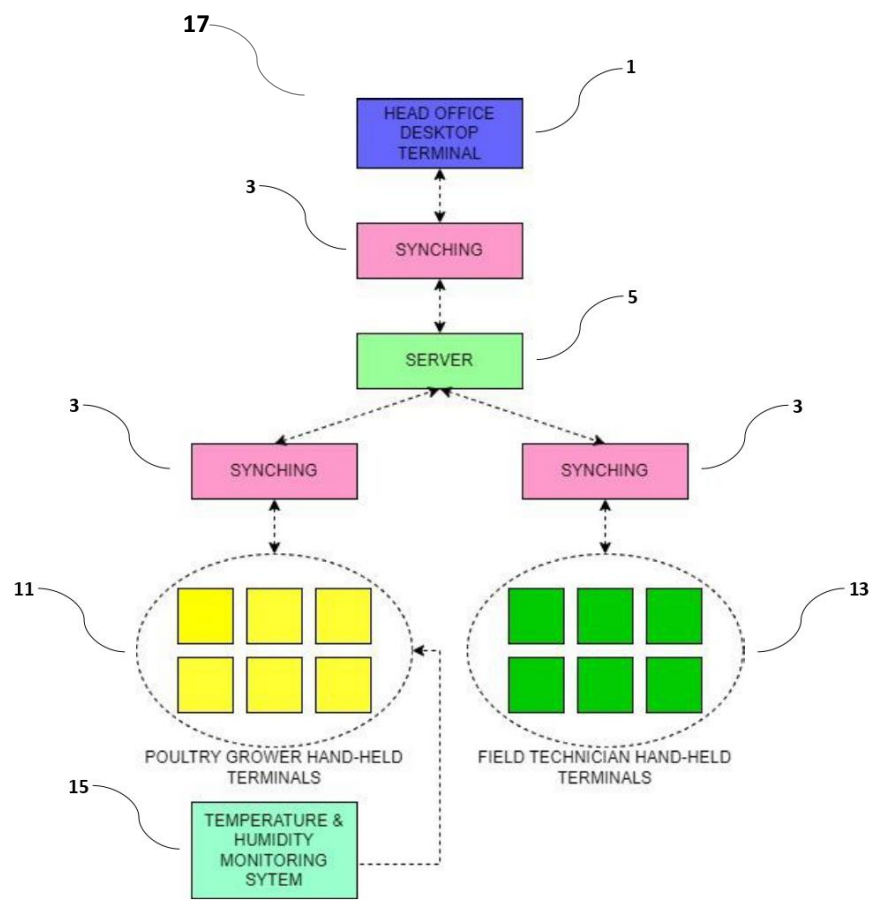

FIG. 1

University of Science and Technology of Southern Philippines
Applicant
By:
Gladdy Christie H. Compasan
ITSO Manager - USTP

EXERCISE 1 - Answer

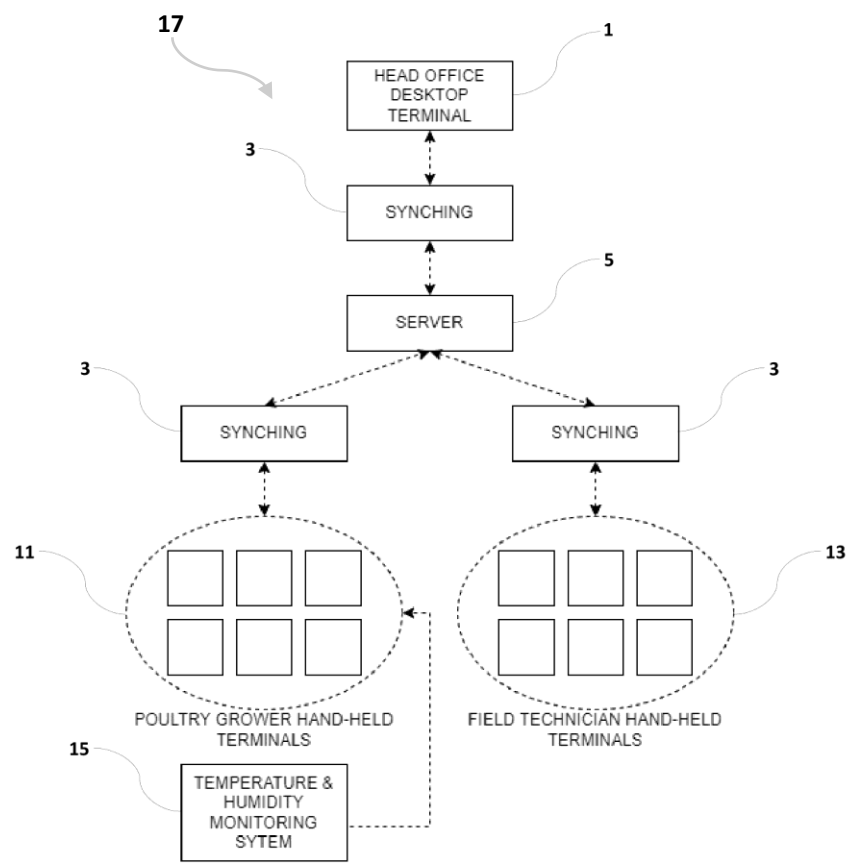

FIG. 1

University of Science and Technology of Southern Philippines
Applicant
By:
Gladdy Christie H. Compasan
ITSO Manager - USTP

EXERCISE 2

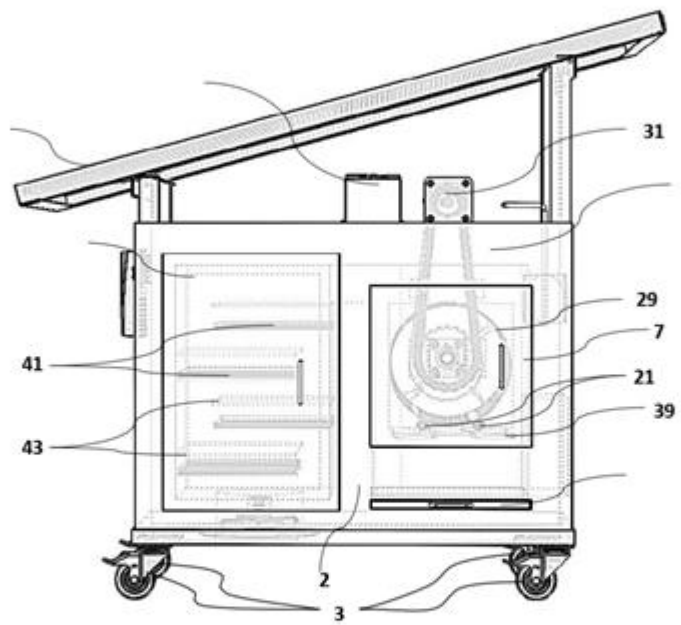

FIG. 2.

EXERCISE 2 - Answer

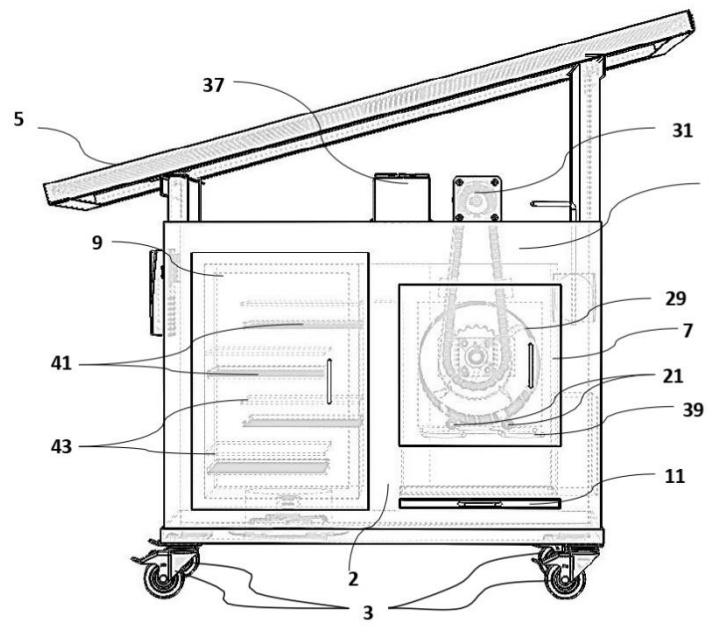

FIG. 2.

University of Science and Technology of Southern Philippines
Applicant
By:
Gladdy Christie H. Compasan
ITSO Manager - USTP

2/5

EXERCISE 3

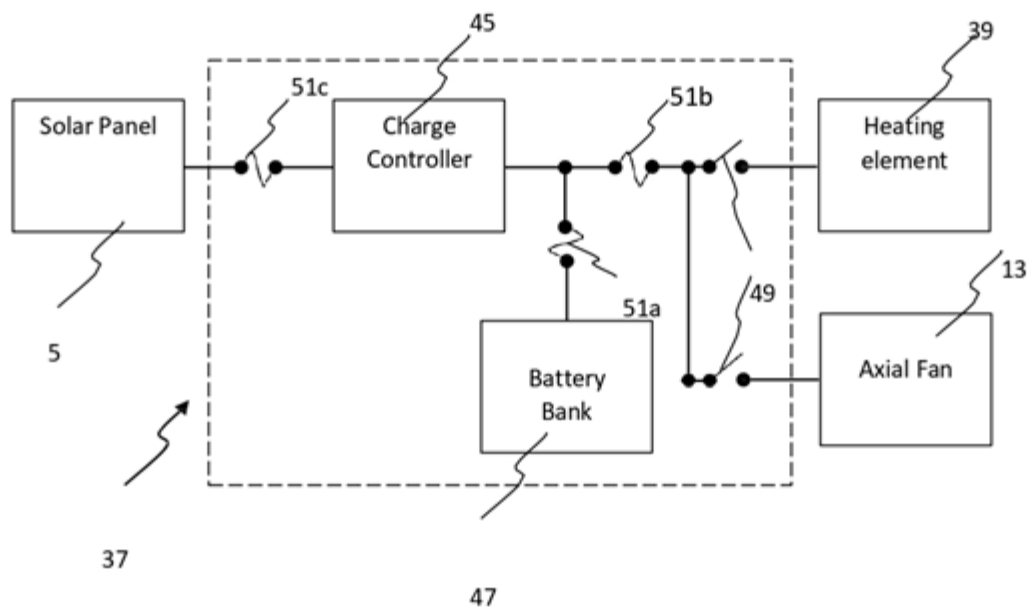

University of Science and Technology of Southern Philippines
Applicant
By:
Gladdy Christie H. Compasan
ITSO Manager - USTP

EXERCISE 3 - Answer

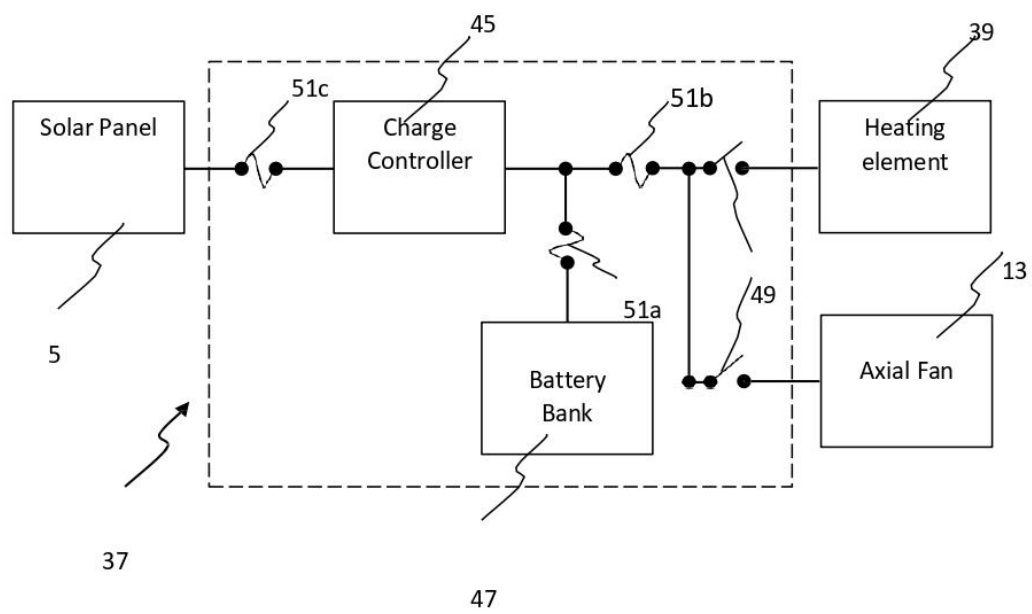

FIG. 5

University of Science and Technology of Southern Philippines
Applicant
By:
Gladdy Christie H. Compasan
ITSO Manager - USTP

5/5

TOOLS FOR DRAWING

1. draw.io
2. SolidWorks
3. AutoCAD
4. SketchUp

PATENT DRAWING ACTIVITY

1. Prepare or create your patent drawing in a separate Word document.

2. In the "Brief Descriptions of Drawings" subsection of your patent draft, write a description for each drawing.

Patent Drawing Example 1 (Mechanical)

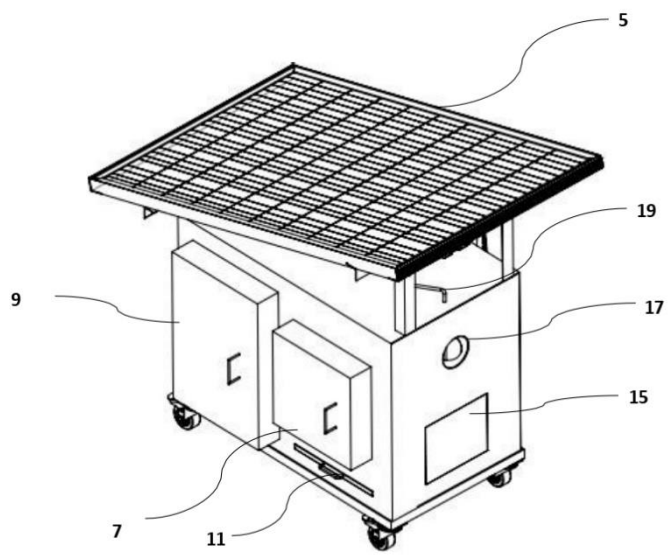

FIG. 1

University of Science and Technology of Southern Philippines
Applicant
By:
Gladdy Christie H. Compasan
ITSO Manager - USTP

1/5

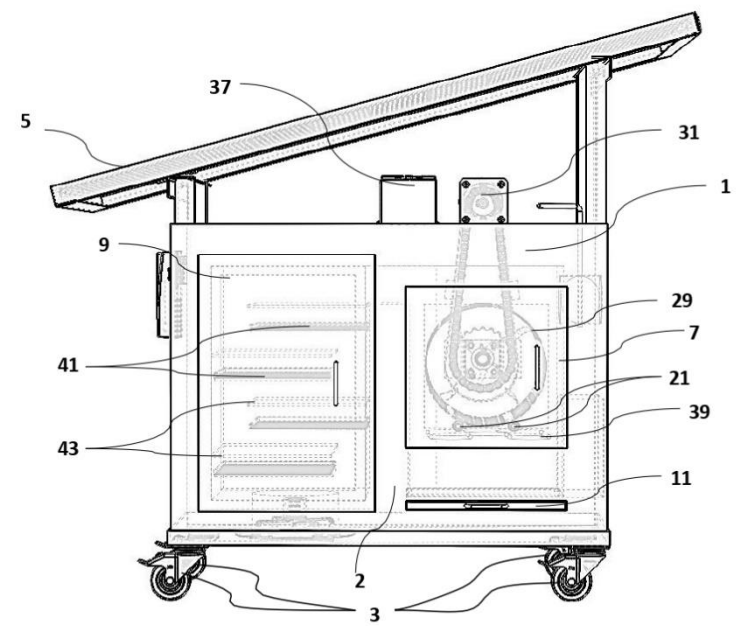

FIG. 2.

University of Science and Technology of Southern Philippines
Applicant
By:
Gladdy Christie H. Compasan
ITSO Manager - USTP

2/5

Patent Drawing Example 1 (Mechanical)

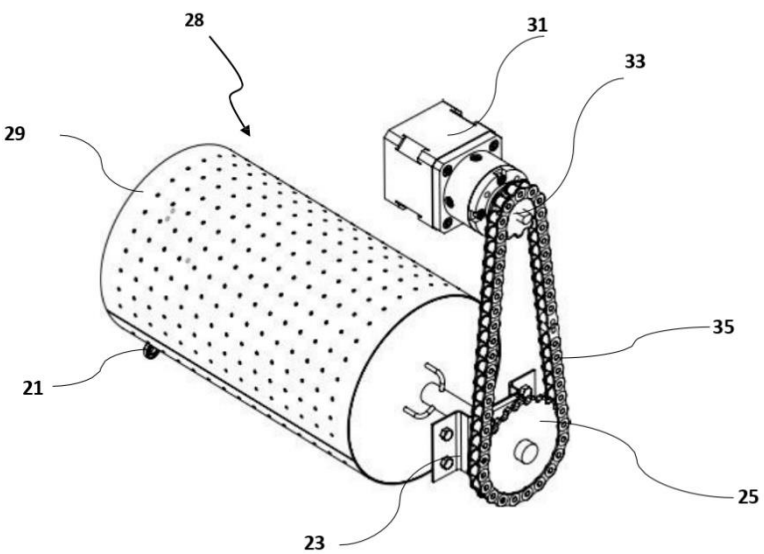

FIG. 3.

University of Science and Technology of Southern Philippines
Applicant
By:
Gladdy Christie H. Compasan
ITSO Manager - USTP

3/5

Patent Drawing Example 1 (Mechanical)

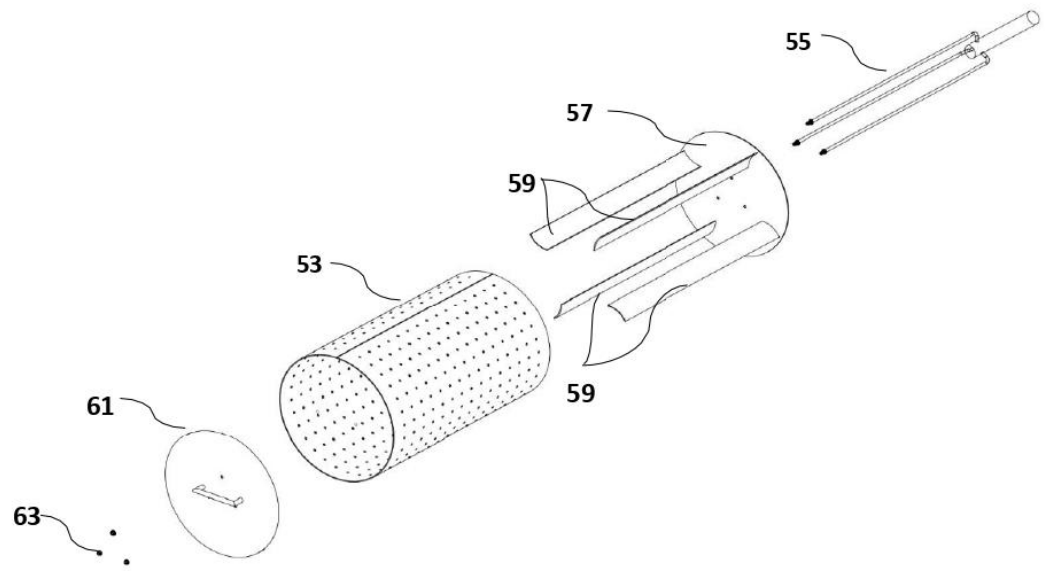

FIG. 4.

University of Science and Technology of Southern Philippines
Applicant

By:

Gladdy Christie H. Compasan
ITSO Manager - USTP

Patent Drawing Example 1 (Mechanical)

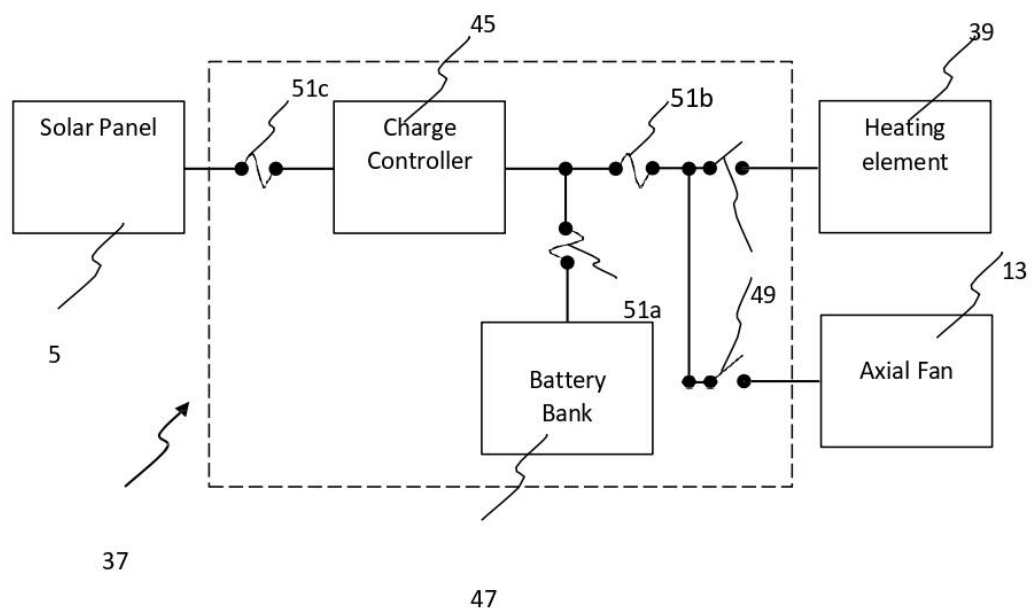

FIG. 5

University of Science and Technology of Southern Philippines
Applicant
By:
Gladdy Christie H. Compasan
ITSO Manager - USTP

5/5

Patent Drawing Example 1 (Mechanical)

BRIEF DESCRIPTION OF THE DRAWINGS

The subject matter regarded as the utility model is particularly pointed out and distinctly claimed in the concluding portion of the specification. The utility model, however, both as to organization and method of operation, together with objects, features, and advantages thereof, may best be understood by reference to the following detailed description when read with the accompanying drawings in which:

FIG. 1 is a perspective view of the concentrated solar thermal processor according to an embodiment of the present utility model;

FIG. 2 is a transparent view of the concentrated solar thermal processor according to an embodiment of the present utility model;

FIG. 3 is an isometric view of the drive mechanism in accordance with an embodiment of the utility model;

FIG. 4 is an exploded view of the roasting drum in accordance with an embodiment of the utility model; and

FIG. 5 is a block diagram of an electrical box in accordance with an embodiment of the utility model.

Patent Drawing Example 2 (CII)

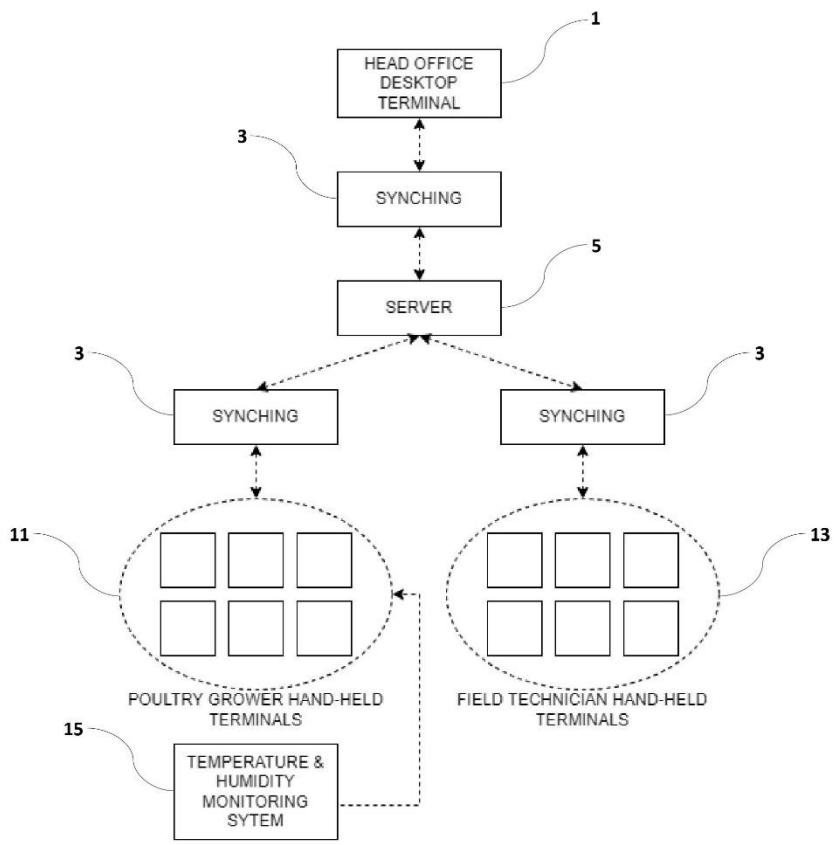

FIG. 1

University of Science and Technology of Southern Philippines
Applicant
By:
Gladdy Christie H. Compasan
ITSO Manager - USTP

1/5

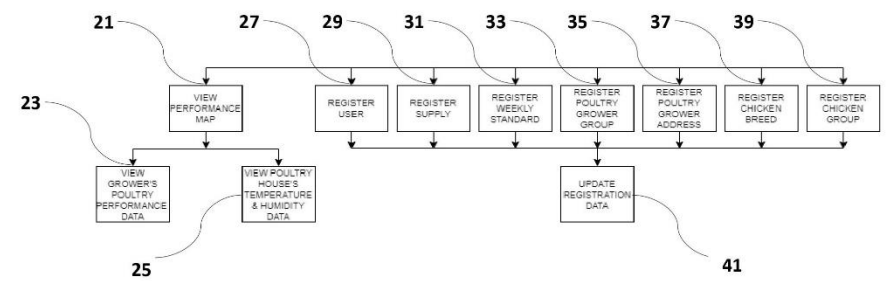

FIG. 2

University of Science and Technology of Southern Philippines
Applicant
By:
Gladdy Christie H. Compasan
ITSO Manager - USTP

2/5

Patent Drawing Example 2 (CII)

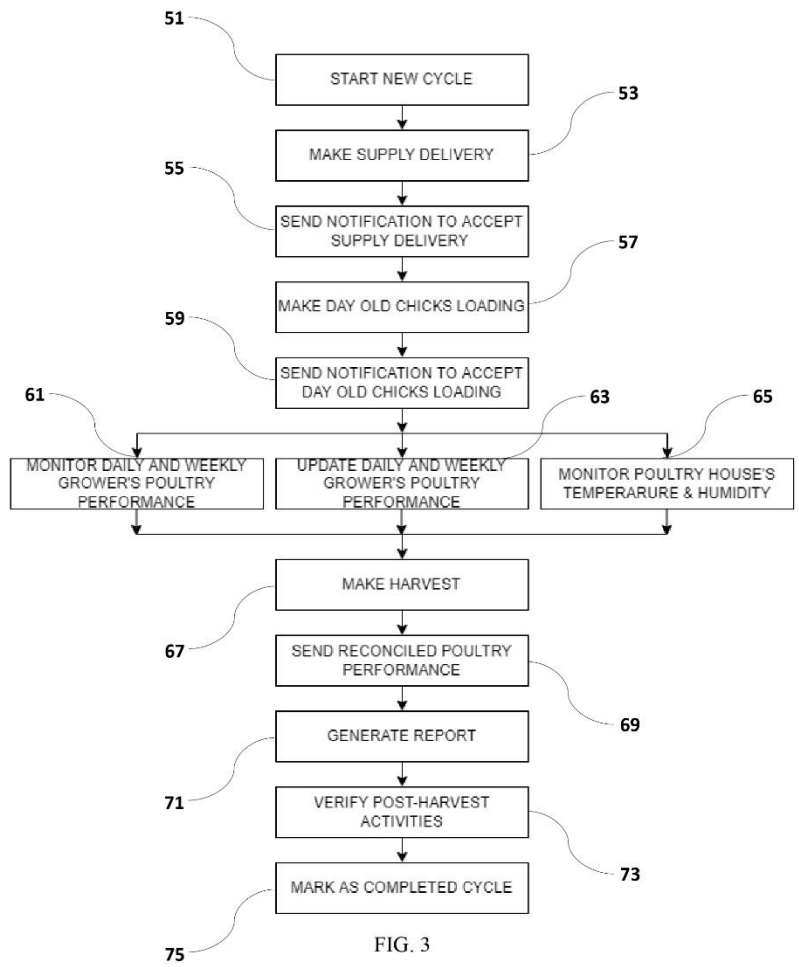

FIG. 3

University of Science and Technology of Southern Philippines
Applicant

By:
Gladdy Christie H. Compasan
ITSO Manager - USTP

3/5

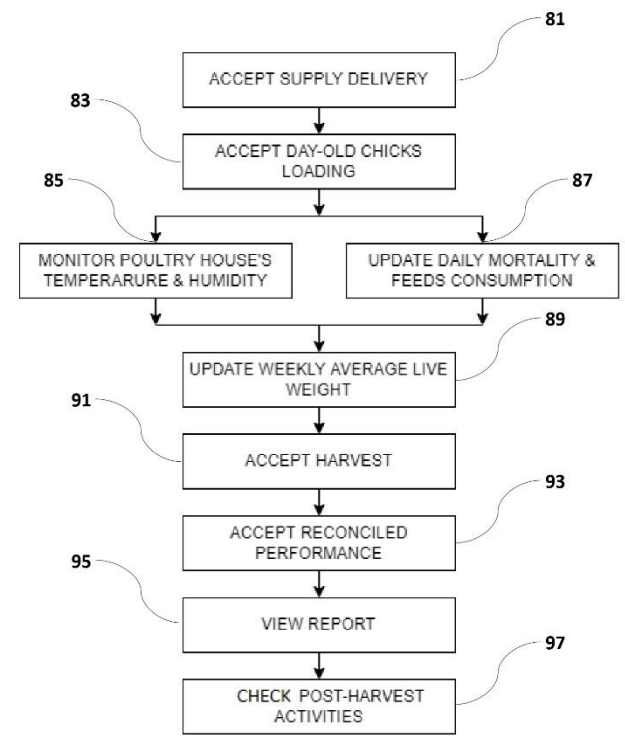

FIG. 4

University of Science and Technology of Southern Philippines
Applicant

By:
Gladdy Christie H. Compasan
ITSO Manager - USTP

4/5

Patent Drawing Example 2 (CII)

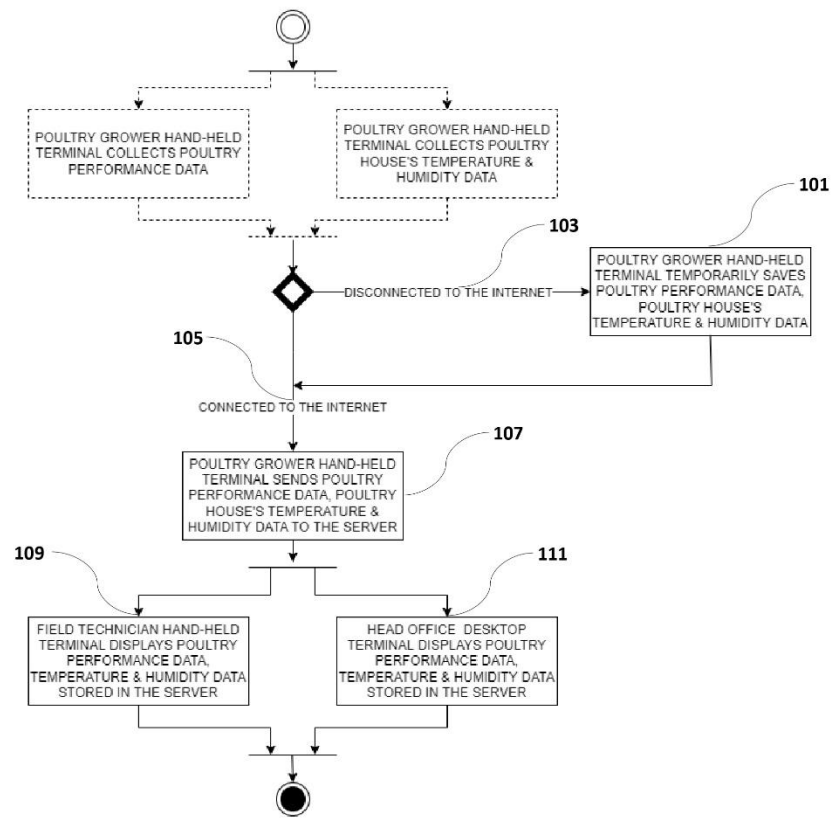

FIG. 5

University of Science and Technology of Southern Philippines
Applicant

By:
Gladdy Christie H. Compasan
ITSO Manager - USTP

5/5

Brief Descriptions of Drawings Example 2 (CII)

Brief Descriptions of Drawings

The figures of the accompanying drawing will provide understanding on how the utility model can be implemented. On such figures, identical reference characters denote similar elements.

FIG 1 is a system architecture diagram of the poultry monitoring system, according to some embodiments of the present utility model.

FIG 2 is a flow diagram of the head office desktop terminal, in accordance with an embodiment of the utility model.

FIG 3 is a flow diagram of the field technician hand-held terminal, in accordance with an embodiment of the utility model.

FIG 4 is a flow diagram of the poultry grower hand-held terminal, in accordance with an embodiment of the utility model.

FIG 5 is a flow diagram of the synching, in accordance with an embodiment of the utility model.

Patent Drawing Example 3 (Electrical)

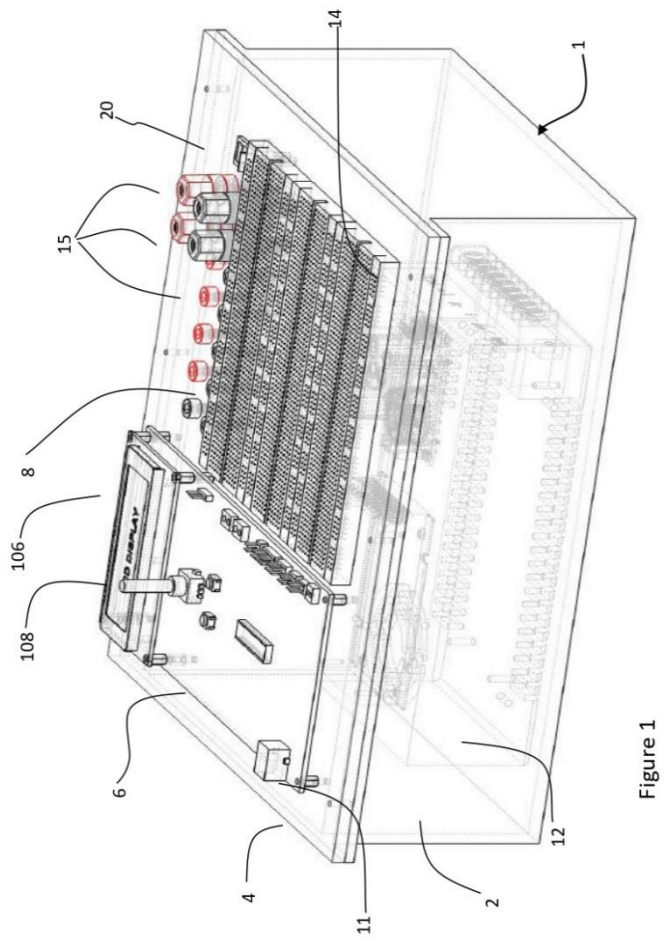

Figure 1

UNIVERSITY OF SCIENCE AND TECHNOLOGY OF SOUTHERN PHILIPPINES
Applicant

By: **CLARK DARWIN M. GOZON**
USTP – ITSO Manage

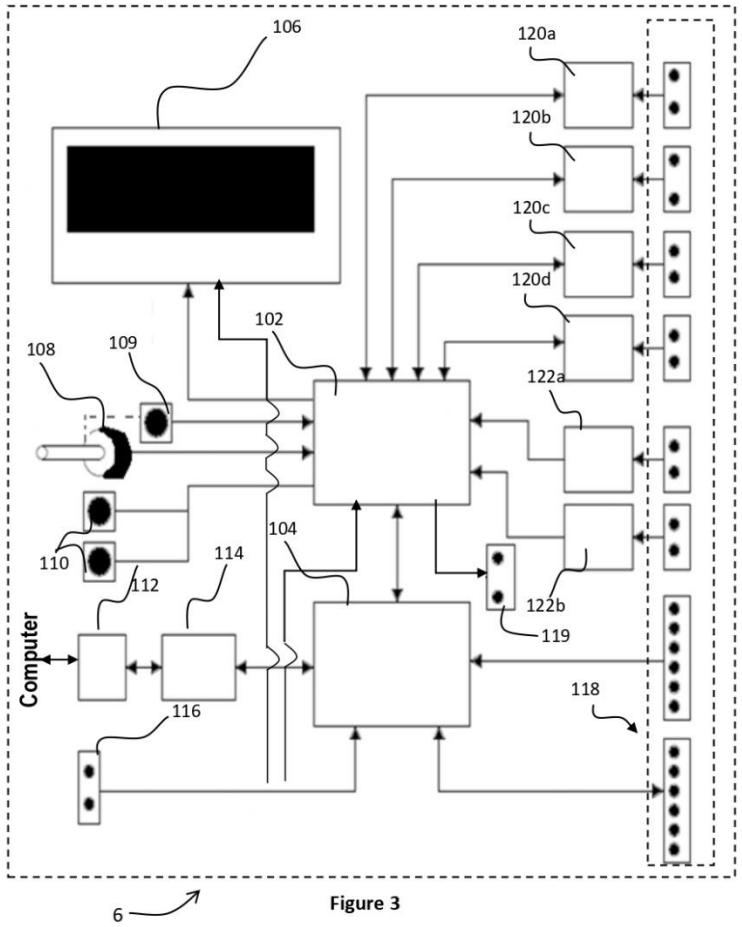

Figure 3

UNIVERSITY OF SCIENCE AND TECHNOLOGY OF SOUTHERN PHILIPPINES
Applicant

By: **CLARK DARWIN M. GOZON**
USTP – ITSO Manager

Patent Drawing Example 3 (Electrical)

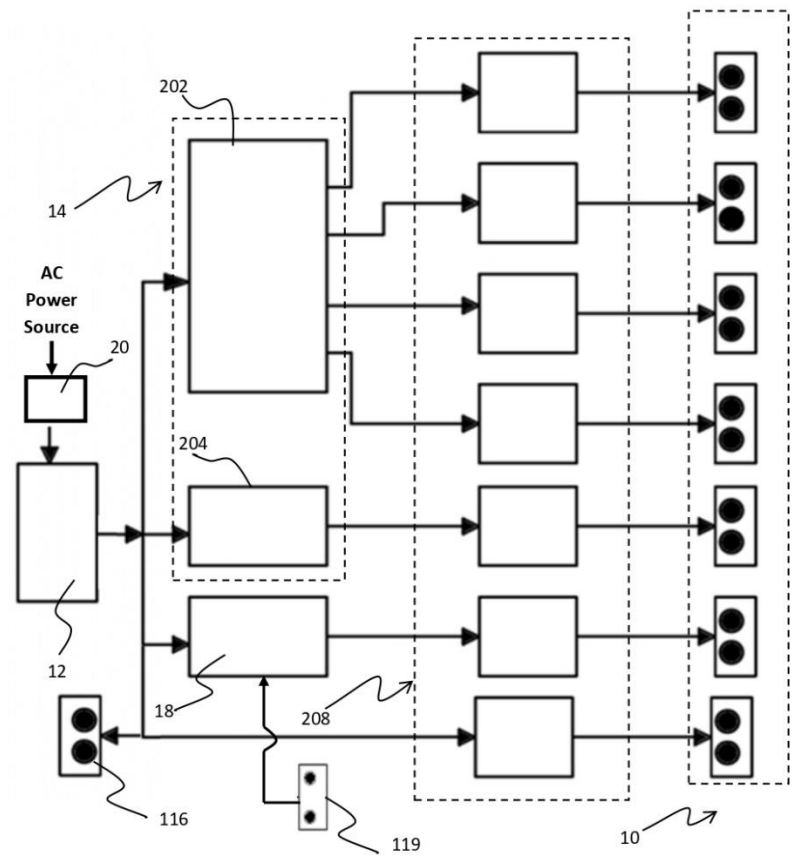

Figure 4

UNIVERSITY OF SCIENCE AND TECHNOLOGY OF SOUTHERN PHILIPPINES
Applicant

By: **CLARK DARWIN M. GOZON**
USTP – ITSO Manager

3 / 8

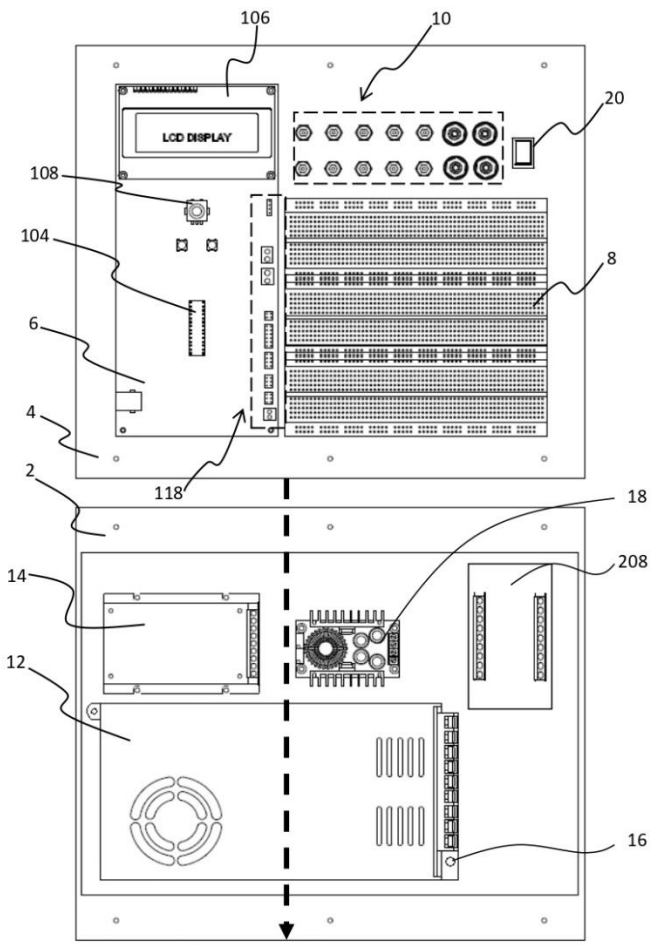

Figure 2

UNIVERSITY OF SCIENCE AND TECHNOLOGY OF SOUTHERN PHILIPPINES
Applicant

By: **CLARK DARWIN M. GOZON**
USTP – ITSO Manager

4 / 8

Patent Drawing Example 3 (Electrical)

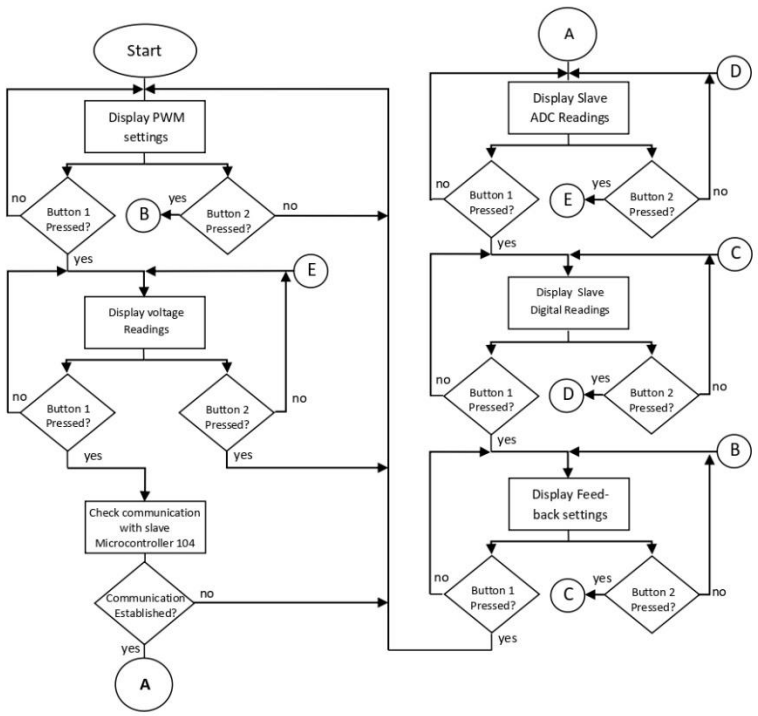

Figure 5

UNIVERSITY OF SCIENCE AND TECHNOLOGY OF SOUTHERN PHILIPPINES
Applicant

By: **CLARK DARWIN M. GOZON**
USTP – ITSO Manager

5 / 8

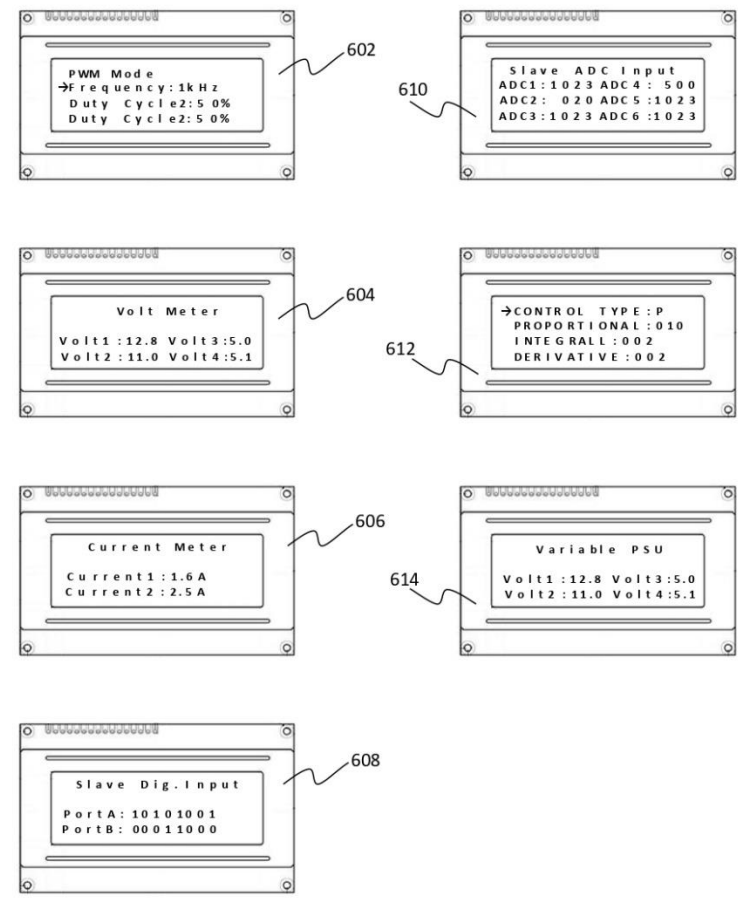

Figure 6

UNIVERSITY OF SCIENCE AND TECHNOLOGY OF SOUTHERN PHILIPPINES
Applicant

By: **CLARK DARWIN M. GOZON**
USTP – ITSO Manager

6 / 8

Patent Drawing Example 3 (Electrical)

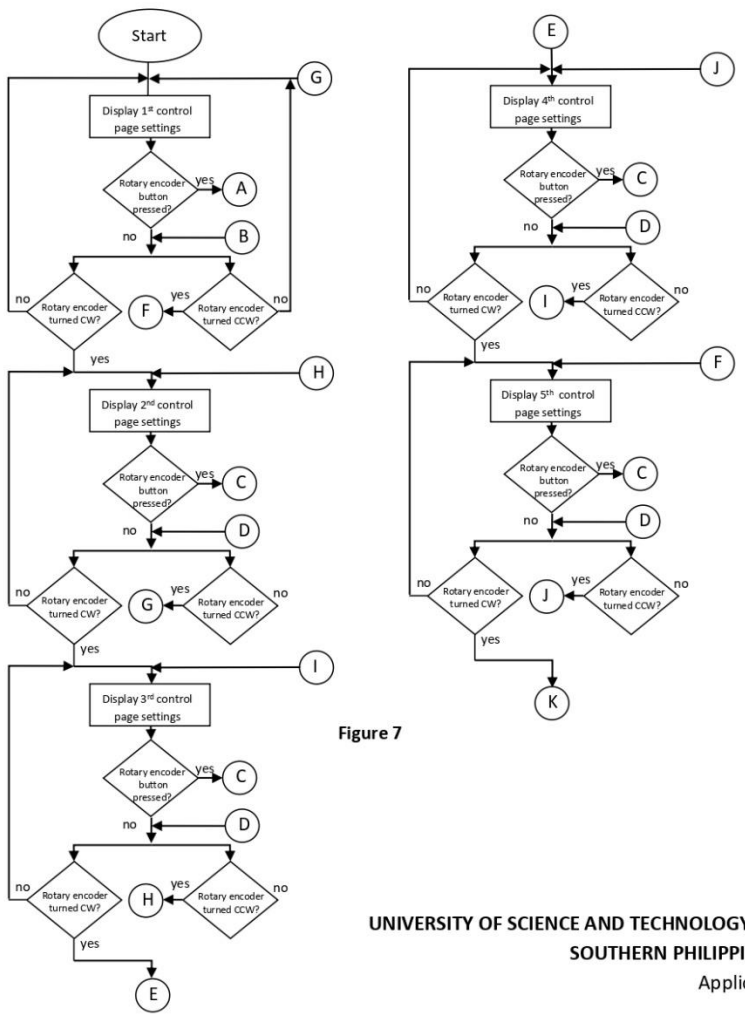

Figure 7

UNIVERSITY OF SCIENCE AND TECHNOLOGY OF SOUTHERN PHILIPPINES
Applicant

By: **CLARK DARWIN M. GOZON**
USTP – ITSO Manager

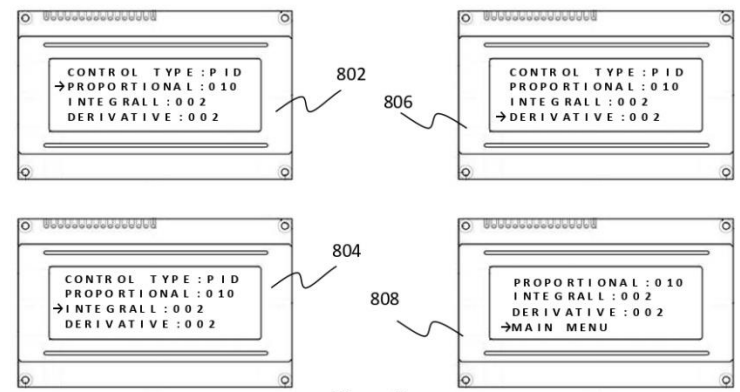

Figure 8

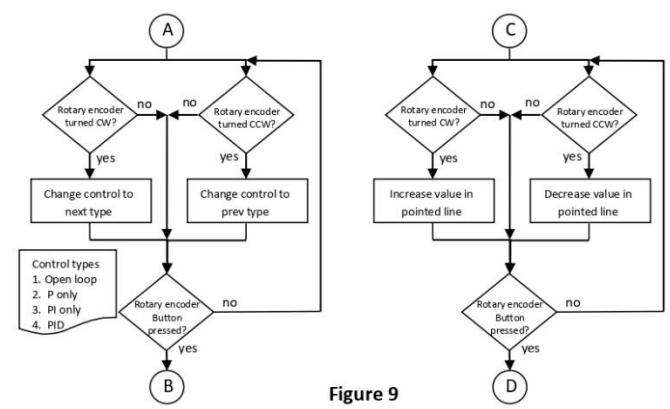

Figure 9

UNIVERSITY OF SCIENCE AND TECHNOLOGY OF SOUTHERN PHILIPPINES
Applicant

By: **CLARK DARWIN M. GOZON**
USTP – ITSO Manager

Brief Descriptions of Drawings Example 3 (Electrical)

BRIEF DESCRIPTIONS OF THE DRAWINGS

The figures of the accompanying drawing will make well understood how the invention can be implemented. On such figures, identical reference characters denote similar elements.

Figure 1 is an illustration of the power electronics laboratory platform, according to some embodiment of the invention;

Figure 2 is an illustration of the laboratory platform having a covering member opened by sliding, according to some embodiment of the invention;

Figure 3 is a block diagram of the features and interrelations of components in the circuit board in accordance with an embodiment of the invention;

Figure 4 is a block diagram of power distribution of the laboratory platform in accordance with an embodiment of the invention;

Figure 5 is a program flow chart diagram of the root display page sequence of the laboratory platform in accordance with an embodiment of the invention;

Figure 6 is a root display pages embodiment of the invention;

Figure 7 is a program flow chart of the control routine of the laboratory platform in accordance with an embodiment of the invention;

Figure 8 is a control display pages embodiments of the invention; and

Figure 9 is a program flow chart diagram of the control sub-routine of the laboratory platform in accordance with an embodiment of the invention.

University of Science and Technology of Southern Philippines

Technology Promotions and Commercialization Office

Thank you for Listening!

Engr. Mark Lister V. Nalupa
ITSO Technical Expert
marklister.nalupa@ustp.edu.ph

P UM TM © ID